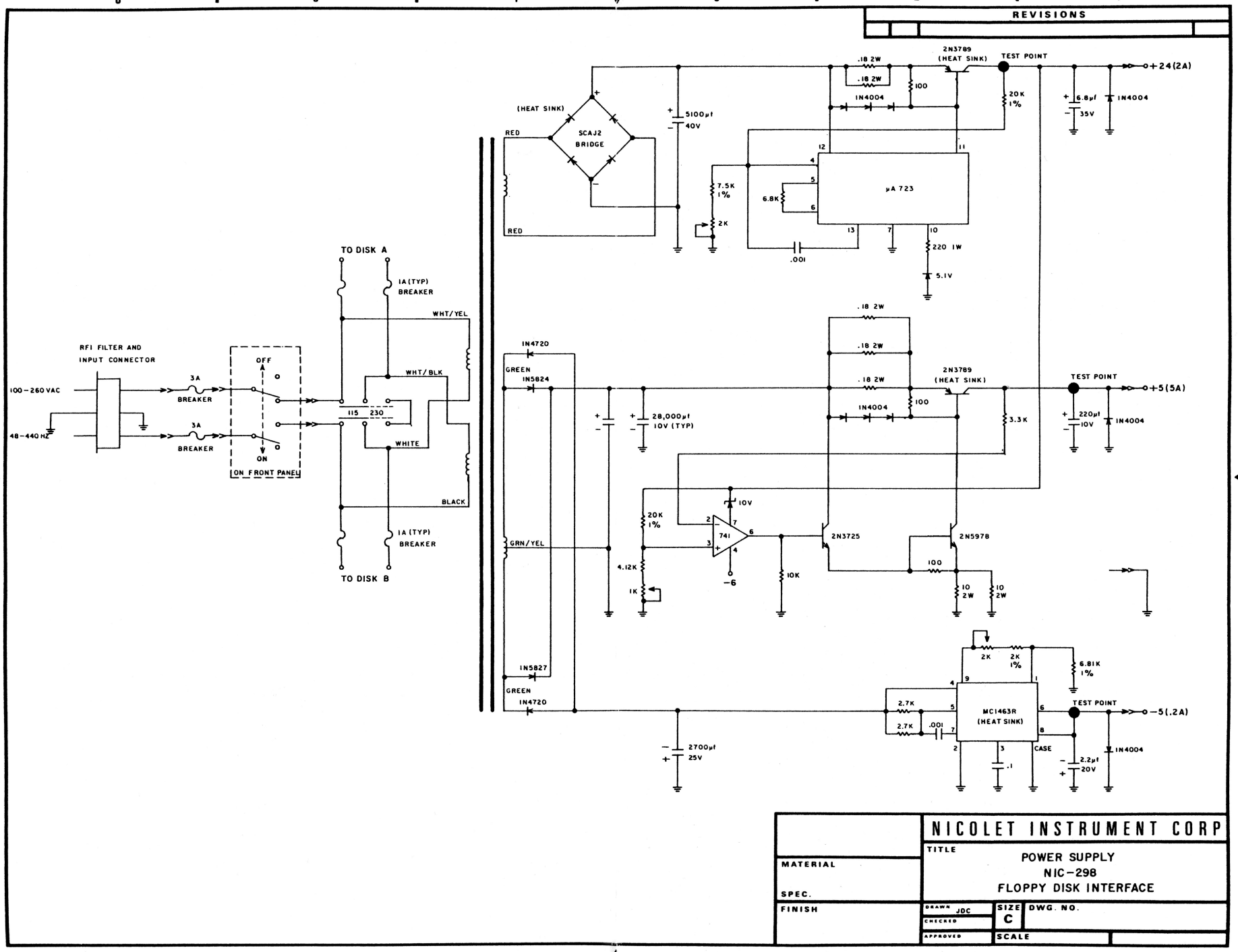
REVISIONS
RFI FILTER AND INPUT CONNECTOR
100-260 VAC
48-440 HZ
3A BREAKER
3A BREAKER
OFF
ON
ON FRONT PANEL
TO DISK A
TO DISK B
1A (TYP) BREAKER
1A (TYP) BREAKER
WHT/YEL
WHT/BLK
WHITE
BLACK
115 230
(HEAT SINK)
SCAJ2 BRIDGE
RED
RED
5100µf 40V
7.5K 1%
2K
6.8K
µA 723
.001
220 1W
5.1V
.18 2W
.18 2W
100
1N4004
2N3789 (HEAT SINK)
TEST POINT
20K 1%
6.8µf 35V
1N4004
+24(2A)
1N4720
GREEN
1N5824
GRN/YEL
1N5827
GREEN
1N4720
28,000µf 10V (TYP)
.18 2W
.18 2W
.18 2W
1N4004
100
2N3789 (HEAT SINK)
3.3K
TEST POINT
220µf 10V
1N4004
+5(5A)
20K 1%
4.12K
1K
741
10V
-6
10K
2N3725
2N5978
100
10 2W
10 2W
2K
2K 1%
6.81K 1%
2.7K
2.7K
.001
MC1463R (HEAT SINK)
CASE
.1
TEST POINT
-5(.2A)
2.2µf 20V
1N4004
2700µf 25V
NICOLET INSTRUMENT CORP
TITLE
POWER SUPPLY
NIC-298
FLOPPY DISK INTERFACE
MATERIAL
SPEC.
FINISH
DRAWN JDC
CHECKED
APPROVED
SIZE C
DWG. NO.
SCALE

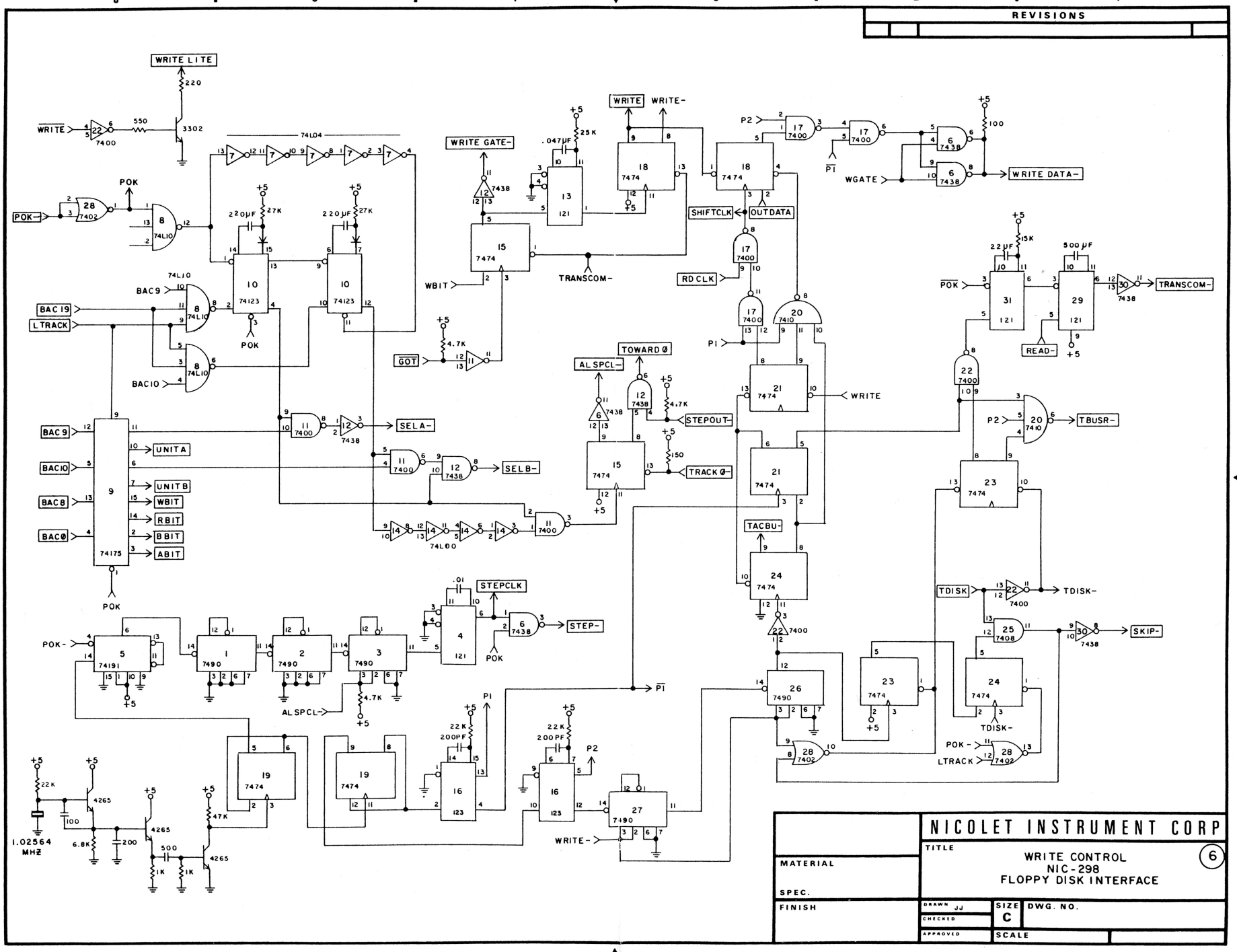

NICOLET INSTRUMENT CORP

TITLE

WRITE CONTROL
NIC-298
FLOPPY DISK INTERFACE

6

MATERIAL

SPEC.

FINISH

DRAWN JJ

CHECKED

APPROVED

SIZE C

DWG. NO.

SCALE

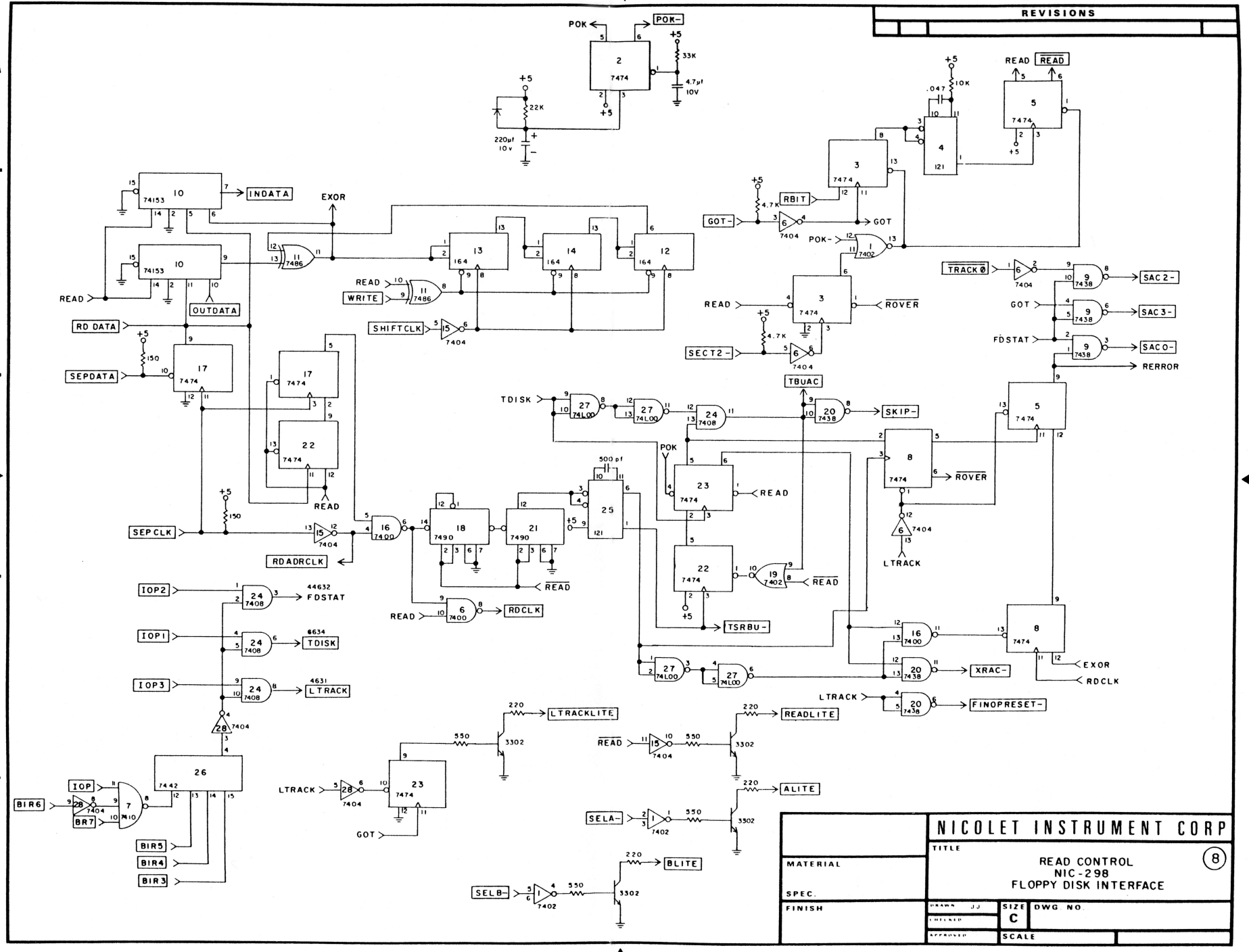
REVISIONS
NICOLET INSTRUMENT CORP
TITLE
READ CONTROL
NIC-298
FLOPPY DISK INTERFACE
8
MATERIAL
SPEC.
FINISH
DRAWN JJ
CHECKED
APPROVED
SIZE C
DWG. NO.
SCALE
INDATA
EXOR
OUTDATA
RD DATA
SEPDATA
SEPCLK
RDADRCLK
RDCLK
IOP2
IOP1
IOP3
FDSTAT
TDISK
LTRACK
IOP
BIR6
BR7
BIR5
BIR4
BIR3
LTRACKLITE
READLITE
ALITE
BLITE
GOT-
GOT
RBIT
POK-
POK
ROVER
SECT2-
TBUAC
SKIP-
TSRBU-
XRAC-
FINOPRESET-
TRACK Ø
SAC2-
SAC3-
SACO-
RERROR
SHIFTCLK
WRITE
READ
SELA-
SELB-

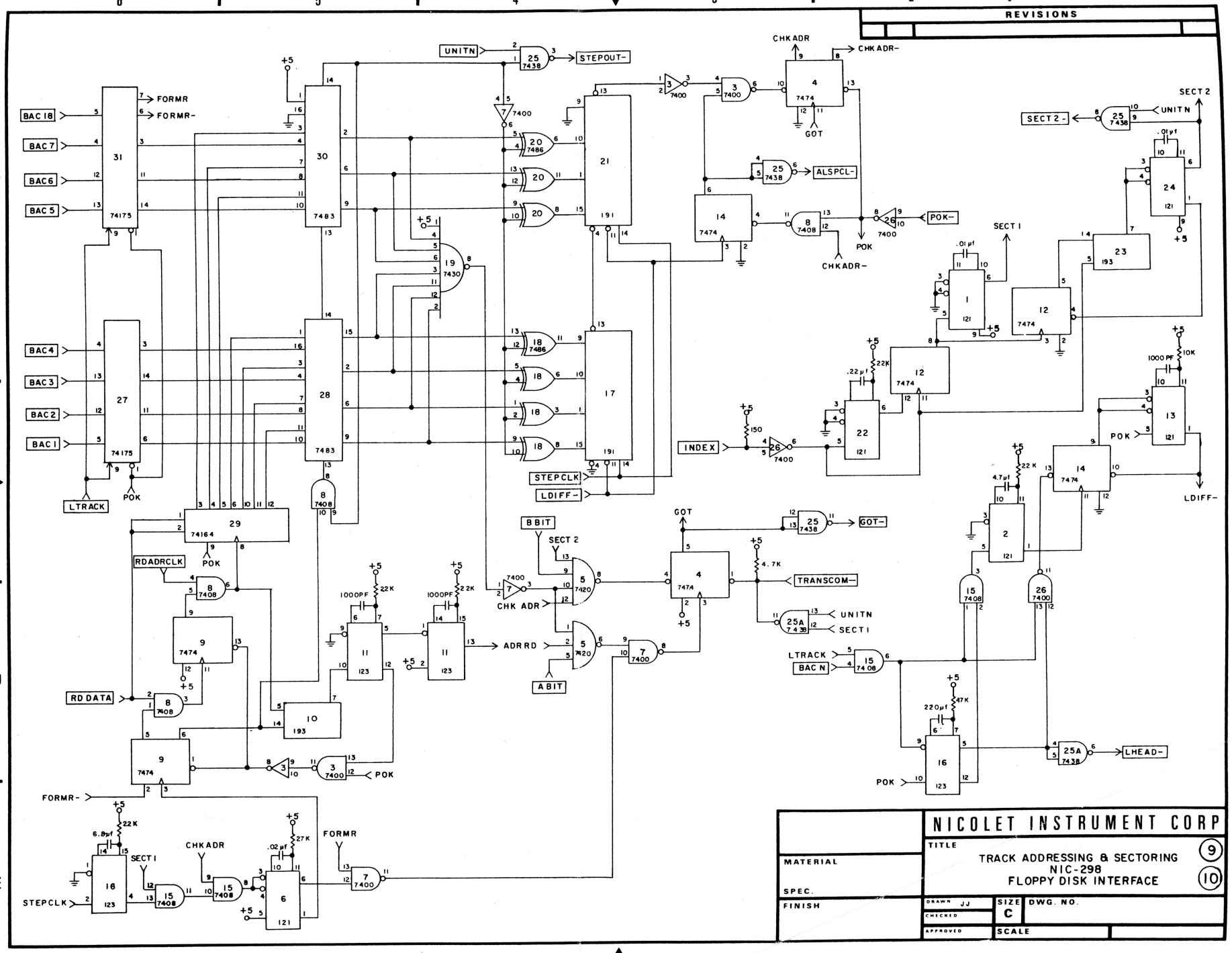
REVISIONS
NICOLET INSTRUMENT CORP
TITLE
TRACK ADDRESSING & SECTORING
NIC-298
FLOPPY DISK INTERFACE
9
10
MATERIAL
SPEC.
FINISH
DRAWN JJ
CHECKED
APPROVED
SIZE C
DWG. NO.
SCALE
BAC 18
BAC 7
BAC 6
BAC 5
BAC 4
BAC 3
BAC 2
BAC 1
LTRACK
POK
FORMR
FORMR-
UNITN
STEPOUT-
STEPCLK
LDIFF-
CHK ADR
CHK ADR-
GOT
ALSPCL-
POK-
INDEX
SECT 2
SECT 2-
SECT I
BBIT
ABIT
RDADRCLK
RD DATA
ADRRD
TRANSCOM-
GOT-
BAC N
LHEAD-