BNC SERIES AND SERIES 1080 SCHEMATICS

BNC AND 1080 WIRING LIST

The following wiring list contains an alphabetical list of signals by mnemonic followed by the pin positions in the wire wrap bed where they can be found.

The numbers to the left of the hyphen refer to the coordinates of the pin row and those to the right to the actual pin number in that row. The attached diagram shows the 1080 bed, containing the seven blocks A - G. Blocks A, B and C each contain 11 rows of pins, Block D contains two rows, and Blocks E, F and G six rows each.

As an example, BACØ, bit Ø of the buffered AC, can be found at 5C-60, or Block C, Row 5, Pin 60. Each of these numbers is actually printed on the wire wrap bed. Connector R refers to the rear connector.

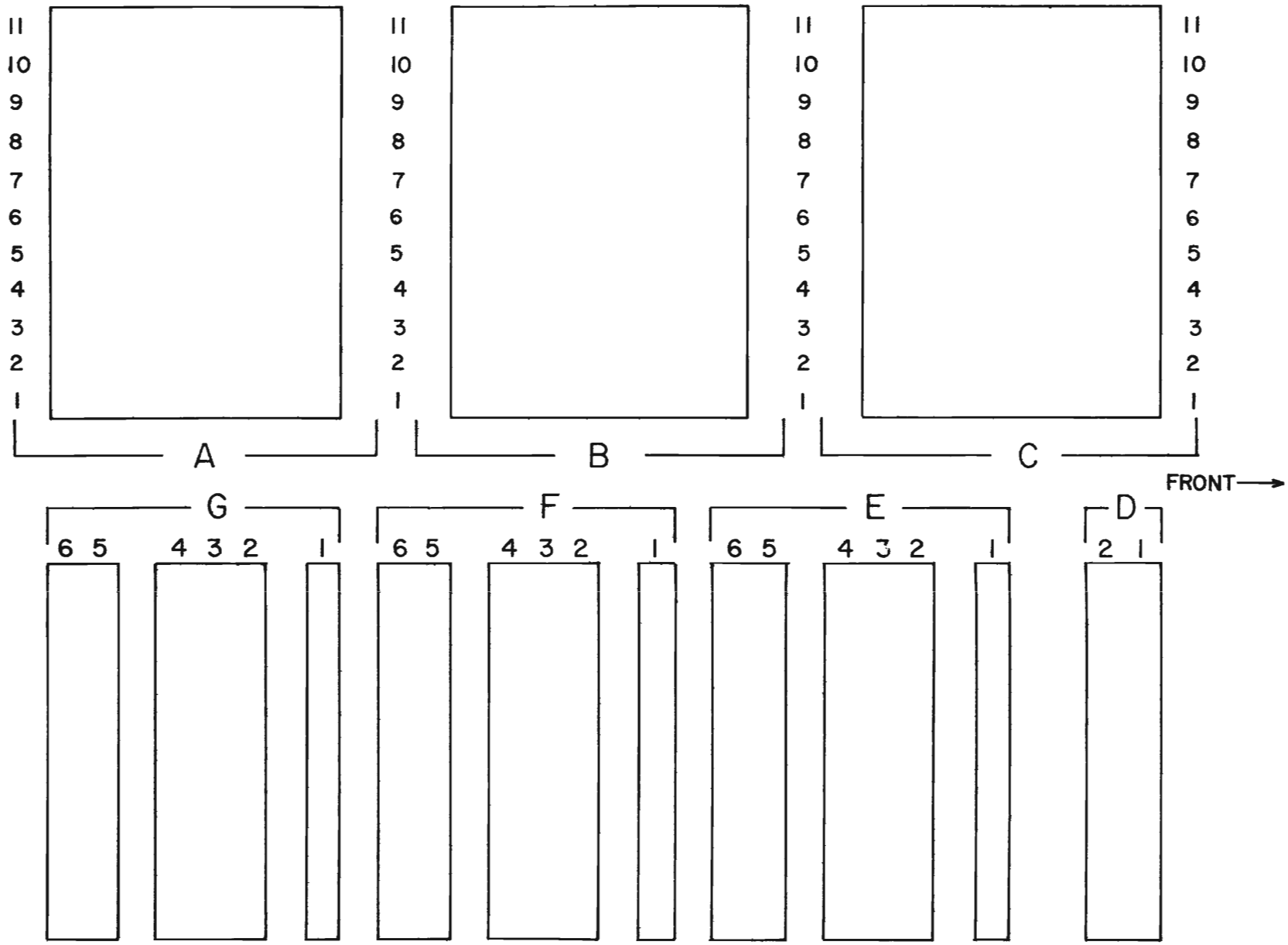
11
10
9
8
7
6
5
4
3
2
1
A
B
C
FRONT
G
F
E
D
6 5
4 3 2
1
2 1

BNC & 1080 LOGIC CONVENTIONS

All logic levels are DTL or TTL compatible. A logical one, a true, or a high is +3 to +5 volts and a logical zero, a false, or a low is 0 to +.4 volts. A signal is true if its assertion slate is high. A "not" signal is indicated by a minus sign and asserts by going low.

Fig. 1 shows the two kinds of gate symbols used. A small circle indicates that a signal is negated. Flip Flops are shown as rectangles. Anything that doesn't fit into this scheme, such as an adder, is drawn as a rectangle with an explanation written in it.

Signals are given mnemonic names which appear on circuit diagrams and printed circuit boards. Blocked signals (signal name is in a rectangle) on schematics leave the board, others do not.

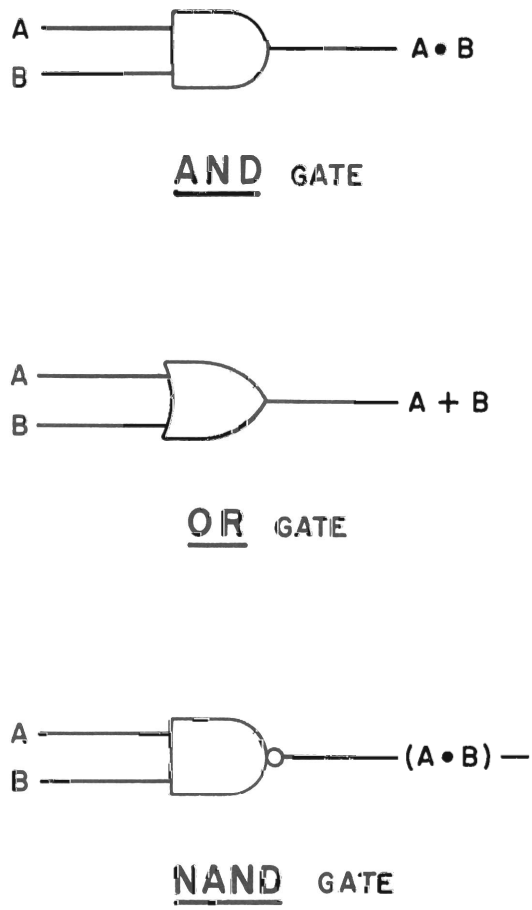

Fig. 1

ALPHABETICAL LIST 1080 WIRING

AAUS-	1D-18	2D-75	9A-70	10A-70		
A14	2A-38	GND				
ACTIVE-	3R-64	3C-42	4C-26	5C-22	9A-78	10A-78
AC0	1C-10	4A-58	3A-55			
AC0-	1C-8	5C-62	11C-12	3A-75		
AC1-	1C-18	5C-64	11C-14	3A-73		
AC2-	1C-26	5C-70	11C-18	3A-71		
AC3-	1C-44	5C-72	11C-20	3A-69		
AC4-	1C-56	5B-2	11C-28	3A-67		
AC5-	1C-72	5B-4	11C-30	3A-65		
AC6-	1B-2	5B-10	11C-34	3A-63		
AC7-	1B-12	5B-12	11C-36	3A-61		
AC8-	1B-18	5B-18	3A-59			
AC9-	1B-30	5B-20	3A-57			
AC10-	1B-44	5B-26	3A-19			
AC11-	1B-58	5B-28	3A-17			
AC12-	1B-68	5B-42	3A-15			
AC13-	1A-2	5B-44	3A-13			
AC14-	1A-8	5A-23	3A-11			
AC15-	1A-18	5A-25	3A-9			
AC16-	1A-30	5A-27	3A-7			
AC17-	1A-42	5A-29	3A-5			
AC18-	1A-52	5A-31	3A-3			
AC19	1A-68	4A-64				
AC19-	1A-66	4A-74	5A-33	3A-1		
ADA	2C-69	4B-24				
ADD	2D-6	9A-46	10A-46			
ADD1-	2A-34	9A-72	10A-72			
ADD2-	2A-36	9A-74	10A-74			
ADIA	2C-67	4B-20				
ADIR	2C-71	4B-28				
ADPCL	2C-73	4B-26				
ADPCU	2C-75	4B-22				
AMAS	2B-22	9A-1	10A-1			
AND	4B-58	1A-58				
ARAS	9A-11	10A-11	2B-24	3C-66		
AUSOF	1D-14	9A-76	10A-76			
AUTOSLEW		3C-3	1D-70			
AXD-	3C-62	5C-34	9A-9	10A-9		
BAC0	5C-60	9A-55	10A-55	3R-2		
BAC1	5C-66	3R-4				
BAC2	5C-68	3R-6				
BAC3	5C-74	3R-8				
BAC4	5C-76	3R-10				
BAC5	5B-6	3R-12				
BAC6	5B-8	3R-14				
BAC7	5B-14	3R-16				
BAC8	5B-16	3R-18				
BAC9	5B-22	3R-20				
BAC10	5B-24	3R-22				
BAC11	5B-30	3R-24				
BAC12	5B-32	3R-26				
BAC13	5B-46	3R-28				
BAC14	5A-14	3R-30				
BAC15	5A-16	3R-32				

BAC16	5A-18	3R-34						
BAC17	5A-20	3R-36						
BAC18	5A-22	3R-38						
BAC19	5A-24	3R-42						
BIR3	5B-76	9A-57	10A-57	3R-44				
BIR4	5B-50	9A-59	10A-59	3R-46				
BIR5	5B-52	9A-61	10A-61	3R-48				
BIR6	5B-60	9A-63	10A-63	3R-50				
BIR7	5A-4	9A-65	10A-65	3R-52				
BL	5A-42	3R-54						
CAL-	5C-16	1D-62						
CIN	1C-3	4B-56						
CLAMP	5A-63	1D-64						
CMAS-	2B-36	9A-3	10A-3					
CM01	5C-52							
CONT-	3C-10	2D-31						
COUT	1A-72	4A-68	3B-42					
CRAS-	9A-13	10A-13	2B-38	3C-48				
CRT	3C-4	1D-66						
CRTREAL	3C-1	1D-68						
DIGIN-	1D-72							
DIGOUT-	1D-74							
DISABLE-		3C-24	9A-15	10A-15				
DISVD-	1D-44	9A-62	10A-62					
DP	2A-49	3B-22	4C-24					
DPLITE	2D-33	4C-28	4R-41					
DPSHIF-	4A-14	3B-16						
DPSTOPLITE		2D-35	4C-30	4R-43				
DWELL	3C-7	9A-17	10A-17					
ENABTTY	11B-60	TTY-4						
ERASE-	3C-26	2D-27						
FDATA-	11B-42	TTY-2						
GDB	1A-71	3C-68						
GND	PINS 39-40-79-80			ALL BOARDS				
IN ADDITION:								
1E,1F,1G,3E,3F,3G,6E,6F,6G				41-42				
2E,2F,2G		1-2-41-42		1SD-27	1SD-28			
1SW-27	1SW-28	PWR-3-5-7		TTY-5				
GO	3C-2	5A-56						
HDP	3A-60	4B-5						
HOLD	3A-62	4C-34						
HP	3A-70	4A-49						
HQGND	5A-60-62-64-66		PWR-11-14					
ICO	4A-10	9A-64	10A-64	5B-64	2D-53	3A-66		
IMHER-	2E-52	2F-52	2G-52	2A-10	1R-52			
INPUT-	2D-14	9A-50	10A-50					
INTENSIFY		5A-65	5C-44					
IOP	3R-56	4A-17	11B-56					
IOP1	3R-58	4A-43	9A-66	10A-66	11C-6	2D-55	5C-26	3B-74
IOP2	5C-32	11C-68	9A-75	10A-75	4A-45	3R-60	3B-60	
IOP3	3R-62	4A-47	9A-77	10A-77	11C-64	5C-56	3B-70	
IOP1	3B-74	4A-43						
IOP2	3B-60	4A-45						
IOP3	3B-70	4A-47						
IPC	2C-49	4B-63	4A-34	3B-64				
IR0	2C-15	3B-24	4A-70	4R-76				
IR0-	2C-30							

IR1	2C-11	3B-28	4A-66	4R-74		
IR1-	2C-20					
IR2	2C-13	3B-26	4A-62	4R-72		
IR2-	2C-22					
IR3	2D-41	2C-9	3B-30	11B-46	4A-60	4R-70
IR3-	2C-18	5B-74	11B-44			
IR4	2D-57	2C-7	4C-74	3B-4	4A-46	4R-68
IR4-	2C-16	3B-6	5B-72	11B-48		
IR5	2C-3	3B-14	11B-50	4A-52	4R-66	
IR5-	2D-59	2C-8	5B-70	4A-44		
IR6	2C-5	4A-26	4R-64	3B-56		
IR6-	2D-61	2C-10	5B-68	11B-52	4A-20	
IR7	2C-1	4A-18	4R-62	3B-54		
IR7-	2D-63	2C-2	11B-54	5A-2	4A-22	
IR8	2B-17	4A-12	4R-60			
IR8-	2B-14	4A-19	3B-50			
IR9	2B-15	4A-16	4R-58	3B-48		
IR9-	2C-76	4A-31				
IR10	2B-6	4A-32	4R-56			
IR10-	2B-4	4B-60				
IR11	2C-74	4B-73	4R-54	3B-46		
IR11-	2C-72	4B-62	4A-28			
IR12	2C-64	4A-24	4R-52			
IR12-	2C-70	4B-64				
IR13	2B-3	4B-72	4R-50			
IR13-	2C-58	4B-66				
IR14	2C-62	4B-74	4A-72	4R-48		
IR14-	2C-60	4B-68				
IR15	2B-1	3B-20	4B-76	4R-46		
IR15-	2C-52	3B-18	4B-70			
IR16	4B-69	4R-44				
IR17	4B-71	4R-42				
IR18	4B-11	4R-38				
IR19	4R-36	4A-30	4B-67			
IR19-	3B-44	4B-9				
ISAC19-	1A-64	4A-4				
IZ	5C-58					
L	4A-54	5A-44				
LAC	1A-74	4B-48	3B-1			
LCAC	1A-60	4B-50				
LCMB-	1C-24	4B-52				
LINK1	1SD-1	1SW-1				
LINK2	1SD-2	1SW-2				
LINK3	1SD-3	1SW-3				
LINK4	1SD-4	1SW-4				
LINK5	1SD-5	1SW-5				
LINK6	1SD-6	1SW-6				
LINK7	1SD-7	1SW-7				
LINK8	1SD-8	1SW-8				
LINK9	1SD-9	1SW-9				
LINK10	1SD-10	1SW-10				
LLSH	1C-4	3C-72				
LMB-	1B-66	4B-54				
LONE	3A-64	1C-1				
LP0	1C-20	4R-75				
LP1	1C-21	4R-73				
LP2	1C-28	4R-71				
LP3	1C-42	4R-69				

LP4	1C-58	4R-67				
LP5	1C-60	4R-65				
LP6	1B-4	4R-63				
LP7	1B-14	4R-61				
LP8	1B-20	4R-59				
LP9	1B-32	4R-57				
LP10	1B-46	4R-55				
LP11	1B-60	4R-53				
LP12	1B-70	4R-51				
LP13	1A-4	4R-49				
LP14	1A-20	4R-47				
LP15	1A-10	4R-45				
LPC	1C-6	4B-57				
LREAD	2E-19	3E-17	6E-17			
LREAD	2F-19	3F-17	6F-17			
LREAD	2G-19	3G-17	6G-17			
LSH	1A-75	3C-70				
LWRITE	2E-33	3E-15	6E-15			
LWRITE	2F-33	3F-15	6F-15			
LWRITE	2G-33	3G-15	6G-15			
LSTROBE	1E-56	2E-23				
LSTROBE	1F-56	2F-23				
LSTROBE	1G-56	2G-23				
M-	3C-9	9A-19	10A-19			
MA0-	2C-65	3E-3	3F-3	3G-3	IR-47	
MA1-	2C-63	3E-5	3F-5	3G-5	IR-49	
MA2-	2C-47	3E-7	3F-7	3G-7	IR-51	
MA3-	2C-37	6E-3	6F-3	6G-3	IR-53	
MA4-	2C-61	6E-5	6F-5	6G-5	IR-55	
MA5-	2C-59	6E-7	6F-7	6G-7	IR-57	
MA6-	2C-35	6E-9	6F-9	6G-9	IR-59	
MA7-	2C-31	6E-11	6F-11	6G-11	IR-61	
MA8-	2B-55	6E-13	6F-13	6G-13	IR-63	
MA9-	2B-53	3E-9	3F-9	3G-9	IR-65	
MA10-	2B-45	3E-11	3F-11	3G-11	IR-67	
MA11-	2B-29	3E-13	3F-13	3G-13	IR-69	
MACRY	2A-32					
MASOF	2B-62	9A-5	10A-5			
MAS1	2A-47	2D-42				
MAS2	2B-54	2D-38				
MAS4	2A-45	2D-48				
MAS8	2B-56	2D-32				
MB0	2C-32	1C-12	2E-6	2F-6	2G-6	IR-6
MB1	2C-26	1C-22	2E-8	2F-8	2G-8	IR-8
MB2	2C-28	1C-30	2E-10	2F-10	2G-10	IR-10
MB3	2C-24	1C-52	2E-12	2F-12	2G-12	IR-12
MB4	2C-14	1C-64	2E-14	2F-14	2G-14	IR-14
MB5	2C-6	1C-76	2E-16	2F-16	2G-16	IR-16
MB6	1B-6	2C-12	2E-18	2F-18	2G-18	IR-18
MB7	1B-16	2C-4	2E-20	2F-20	2G-20	IR-20
MB8	1B-22	2B-16	2E-22	2F-22	2G-22	IR-22
MB9	2B-10	1B-34	2E-24	2F-24	2G-24	IR-24
MB10	2B-12	1B-48	2E-56	2F-56	2G-56	IR-26
MB11	2B-8	1B-62	2E-58	2F-58	2G-58	IR-28
MB12	1B-72	2C-68	2E-60	2F-60	2G-60	IR-30
MB13	1A-6	2C-56	2E-62	2F-62	2G-62	IR-32
MB14	1A-12	2C-66	2E-64	2F-64	2G-64	IR-34
MB15	1A-22	2C-54	2E-66	2F-66	2G-66	IR-36

MB16	4B-32	1A-34	2E-68	2F-68	2G-68	IR-38
MB17	2E-70	2F-70	2G-70	1A-46	4B-36	IR-56
MB18	2E-72	2F-72	2G-72	1A-56	4B-30	IR-58
MB19	2E-74	2F-74	2G-74	1A-70	4B-38	IR-60
// MEM-	2D-8	9A-48	10A-48			
MIDX	5A-6	2D-19				
MIDY	5B-48	2D-13				
MLITE	3C-56	1D-58				
MNO	2D-3	9A-42	10A-42			
MNC	2D-5	9A-44	10A-44			
NXMLIT	2A-6	1D-60				
P6	3B-52	4C-32				
PC0	1C-14	2C-57				
PC1	1C-16	2C-55				
PC2	1C-34	2C-45				
PC3	1C-36	2C-43				
PC4	1C-68	2C-53				
PC5	1C-70	2C-51				
PC6	1B-8	2C-33				
PC7	1B-10	2C-29				
PC8	1B-26	2B-59				
PC9	1B-28	2B-51				
PC10	1B-52	2B-35				
PC11	1B-54	2B-33				
PC12	1B-74	2B-49				
PC13	1B-76	2B-47				
PC14	1A-14	2B-27				
PC15	1A-16	2B-25				
PROT-	2A-51	2D-25				
PSTART-	2D-67	4C-72	3R-67			
R-	3C-22	9A-21	10A-21			
RAC-	1C-54	4A-6				
RAC19-	1A-62	4A-8				
RASH	1A-73	3C-76				
RASOF	3C-6	2B-26	9A-7	10A-7		
RAS1	2B-52	2D-71				
RAS2	2B-58	2D-74				
RAS4	2B-50	2D-50				
RAS8	2B-60	2D-72				
RAUS-	1D-12	2D-29	9A-60	10A-60		
REALPLOT		3C-5	1D-52			
READ	2E-54	2F-54	2G-54	2A-14	4B-16	IR-54
REAR1	5A-43					
REAR2	5A-45					
REAR3	5A-47					
REAR4	5A-59					
REAR5	5A-61					
REAR6	5A-67					
REAR7	5A-69					
RLITE	3C-50	1D-54				
RLSH	1A-76	3C-74				
RMBL-	2A-18	1B-38	4B-3	3C-16		
RMBU-	1A-36	4B-1	3C-14			
RNO	3C-46	2D-7				
RPC-	2B-23	2C-27	4C-17			
RSH	1C-2	3B-2				
RX	5C-12	2D-17				
RXD-	3C-58	5C-10	9A-79	10A-79		

RY	5A-12	2D-11					
SAC0-	3R-1	9A-2	10A-2	11B-2	1C-5	2D-73	3A-16
SAC1-	3R-3	9A-4	10A-4	11B-1	1C-15	2D-76	3A-18
SAC2-	3R-5	9A-6	10A-6	11B-3	1C-27	2D-54	3A-20
SAC3-	3R-7	9A-8	10A-8	11B-4	1C-43	2D-70	3A-22
SAC4-	3R-9	9A-10	10A-10	11B-8	1C-55	2D-62	3A-24
SAC5-	3R-11	9A-12	10A-12	11B-5	1C-69	2D-68	3A-26
SAC6-	3R-13	9A-14	10A-14	11B-7	1C-75	2D-60	3A-28
SAC7-	3R-15	9A-16	10A-16	11B-10	1B-3	2D-52	3A-30
SAC8-	3R-17	9A-18	10A-18	1B-13	2D-44	3A-32	
SAC9-	3R-19	9A-20	10A-20	1B-29	2D-36	3A-34	
SAC10-	3R-21	9A-22	10A-22	1B-41	2D-46	3A-36	
SAC11-	3R-23	9A-24	10A-24	1B-57	2D-34	3A-38	
SAC12-	3R-25	9A-26	10A-26	1B-69	2D-26	3A-42	
SAC13-	3R-27	9A-28	10A-28	1A-1	2D-28	3A-44	
SAC14-	3R-29	9A-30	10A-30	1A-5	2D-20	3A-46	
SAC15-	3R-31	9A-32	10A-32	1A-15	2D-18	3A-48	
SAC16-	3R-33	9A-34	10A-34	1A-27	2D-4	3A-50	
SAC17-	3R-35	9A-36	10A-36	1A-43	2D-12	3A-52	
SAC18-	3R-37	9A-38	10A-38	1A-55	2D-10	3A-54	
SAC19-	3R-41	9A-40	10A-40	4A-27	2D-2	3A-56	
SELECT	11B-62	TTY-1					
SEL0	2A-60	2E-50					
SEL1	2A-62	1R-62					
SEL10	2A-59	2G-50					
SEL11	2A-61	2F-50					
SEL12	2A-63	1R-64					
SEL13	2A-65	1R-66					
SEL14	2A-67	1R-68					
SEL15	2A-69	1R-70					
SEL16	2A-71	1R-72					
SEL17	2A-73	1R-74					
SHIFT-	3C-34	9A-23	10A-23				
SKIP-	11C-58	9A-33	10A-33	4A-29	3R-66		
SMB0-	1C-7	1E-2	1F-2	1G-2	IR-3		
SMB1-	1C-23	1E-4	1F-4	1G-4	IR-5		
SMB2-	1C-35	1E-6	1F-6	1G-6	IR-7		
SMB3-	1C-49	1E-8	1F-8	1G-8	IR-9		
SMB4-	1C-63	1E-20	1F-20	1G-20	IR-11		
SMB5-	1C-73	1E-22	1F-22	1G-22	IR-13		
SMB6-	1B-1	1E-24	1F-24	1G-24	IR-15		
SMB7-	1B-9	1E-26	1F-26	1G-26	IR-17		
SMB8-	1B-21	1E-32	1F-32	1G-32	IR-19		
SMB9-	1B-37	1E-34	1F-34	1G-34	IR-21		
SMB10-	1B-49	1E-36	1F-36	1G-36	IR-23		
SMB11-	1B-65	1E-38	1F-38	1G-38	IR-25		
SMB12-	1B-75	1E-58	1F-58	1G-58	IR-27		
SMB13-	1A-3	1E-60	1F-60	1G-60	IR-29		
SMB14-	1A-7	1E-62	1F-62	1G-62	IR-31		
SMB15-	1A-23	1E-64	1F-64	1G-64	IR-33		
SMB16-	1A-35	1E-68	1F-68	1G-68	IR-35		
SMB17-	1A-51	1E-70	1F-70	1G-70	IR-37		
SMB18-	1A-63	1E-72	1F-72	1G-72	IR-43		
SMB19-	1A-69	1E-74	1F-74	1G-74	IR-45		
SPARE1	4R-31						
SPARE2	4R-33						
SPARE3	4R-35						
SPARE4	4R-32						

SPARE5	4R-34						
START-	4C-70	2D-65					
STOP-	9A-68	10A-68	3C-64	1D-50			
STOPCAL	5C-14	2D-15					
SX	5C-8	2D-21					
SY	5A-41	2D-23					
TAC	1B-56	3B-12					
TACXD-	5C-24	9A-67	10A-67				
TACYD-	3C-60	5C-30	9A-69	10A-69			
TDBAC-	3B-10	4A-25					
TDBMB	1A-26	4B-46					
TIAPCL-	2C-41	4B-61					
TIAPCU-	2B-31	4B-44					
TMBIA-	2C-19	2B-21	4B-65				
TMBIR	2C-17	2B-19	4B-34				
TRAA	2A-58	3C-20					
VD0	9A-52	10A-52	3B-38	1D-46			
VD1	9A-54	10A-54	3B-34	1D-42			
VD2	9A-56	10A-56	3B-36	1D-48			
VD3	9A-58	10A-58	3B-32	1D-28			
WRITE	4B-12	2E-48	2F-48	2G-48	IR-48		
WSTOPLITE		3C-30	1D-56				
XADPC-	4B-7	3R-57	9A-35	10A-35	3B-76		
XCIN-	4B-75	9A-37	10A-37				
XIPC-	4A-13	3R-59					
XLAC-	4A-7	3R-49	9A-39	10A-39			
XLCAC-	4A-5	9A-41	10A-41				
XLCMB-	4A-1	9A-43	10A-43				
XLMB-	3C-18	4A-3	3R-51	9A-25	10A-25		
XPNDISP-		5A-8	9A-71	10A-71			
XRAC-	4A-15	3R-43	9A-45	10A-45	3B-62		
XREAD-	3C-12	4B-18	3R-45	9A-27	10A-27		
XSTART-	4C-68	3R-63	9A-47	10A-47			
XSTOP-	2D-69	4C-66	3R-65				
XTDBAC-	3C-38	3B-8	3R-55	9A-29	10A-29		
XTDBMB-	3R-53	4A-9	9A-49	10A-49			
XTMBPC-	3R-61	4A-11	9A-51	10A-51			
XWRITE-	3C-36	4B-14	9A-31	10A-31	3R-47		
YPOSDISP-		5A-10	9A-73	10A-73			
ZERO	1A-38	4A-2					
1KM-	2B-64	2D-24					
2KM-	2B-66	2D-30					
4KM-	2B-68	2D-22					
8KM-	2B-70	2D-16					
1KR-	2B-28	2D-64					
2KR-	2B-34	2D-66					
4KR-	2B-32	2D-58					
8KR-	2B-30	2D-56					
1KXD	5C-5	1D-38					
2KXD	5C-7	1D-36					
4KXD	5C-9	1D-34					
8KXD	5C-11	1D-32					
16KXD	5C-13	1D-30					
2MHZ	3C-8	4C-36	9A-53	10A-53			
+5	PINS 77-78		EXCEPT 9A AND 10A				
PWR-4-6-8		1SD-25	1SD-26	1SW-25	1SW-26		
+14	3E-36	3F-36	3G-36	6E-36	6F-36	6G-36	Z14
+15	5A-72	1SD-24	1SW-24	PWR-10			

+24	2E-3-4-75-76		2F-3-4-75-76		2G-3-4-75-76		PWR-15
3E-1	3F-1	3G-1	6E-1	6F-1	6G-1	1R-44	PWR-9
+5Ø	5A-76	1SD-23	1SW-23	PWR-16			
-5	1E-1	1F-1	1G-1	5A-46	1SD-29	1SW-29	PWR-2
-15	5A-7Ø	1SD-3Ø	1SW-3Ø	TTY-3	PWR-12		
-5Ø	5A-74	1SD-31	1SW-31	PWR-13			

ALPHABETICAL LIST BNC-12 WIRING

A14	2A-38	GND				
ACTIVE-	3R-64	3C-42	4C-26	5C-22	7C-76	FB-04
AC0	1C-10	4A-58	3A-55			
AC0-	1C-8	5C-62	11C-12	3A-75		
AC1-	1C-18	5C-64	11C-14	3A-73		
AC2-	1C-26	5C-70	11C-18	3A-71		
AC3-	1C-44	5C-72	11C-20	3A-69		
AC4-	1C-56	5B-2	11C-28	3A-67		
AC5-	1C-72	5B-4	11C-30	3A-65		
AC6-	1B-2	5B-10	11C-34	3A-63		
AC7-	1B-12	5B-12	11C-36	3A-61		
AC8-	1B-18	5B-18	3A-59			
AC9-	1B-30	5B-20	3A-57			
AC10-	1B-44	5B-26	3A-19			
AC11-	1B-58	5B-28	3A-17			
AC12-	1B-68	5B-42	3A-15			
AC13-	1A-2	5B-44	3A-13			
AC14-	1A-8	5A-23	3A-11			
AC15-	1A-18	5A-25	3A-9			
AC16-	1A-30	5A-27	3A-7			
AC17-	1A-42	5A-29	3A-5			
AC18-	1A-52	5A-31	3A-3			
AC19	1A-68	4A-64				
AC19-	1A-66	4A-74	5A-33	3A-1		
ADA	2C-69	4B-24				
ADD1-	2A-34	7B-30	9A-09			
ADIA	2C-67	4B-20				
ADIR	2C-71	4B-28				
ADPCL	2C-73	4B-26				
ADPCU	2C-75	4B-22				
AMAS	2B-22	7B-58	9A-19			
AND	4B-58	1A-58				
ARAS	2B-24	3C-66				
ASEL	9B-08	2D-15				
AUTOSLEW		3C-3	1D-70			
AXD-	3C-62	5C-34	7B-36			
BAC0	5C-60	7C-56	9A-15	7A-70	3R-2	FA-01
BAC1	5C-66	7C-54	7A-72	3R-4	FA-02	
BAC2	5C-68	7C-52	7A-74	3R-6	FA-03	
BAC3	5C-74	7C-50	7A-76	3R-8	FA-04	
BAC4	5C-76	7C-46	7A-62	3R-10	FA-05	
BAC5	7C-44	5B-6	7A-64	3R-12	FA-06	
BAC6	7C-42	5B-8	7A-66	3R-14	FA-07	
BAC7	7C-38	5B-14	7A-68	3R-16	FA-08	
BAC8	7C-34	5B-16	7A-54	3R-18	FA-09	
BAC9	7C-32	5B-22	7A-56	3R-20	FA-10	
BAC10	7C-30	5B-24	7A-60	3R-22	FA-11	
BAC11	7C-28	5B-30	7A-58	3R-24	FA-12	
BAC12	7C-22	5B-32	7A-46	3R-26	FA-13	
BAC13	7C-20	5B-46	7A-48	3R-28	FA-14	
BAC14	7C-18	5A-14	7A-50	3R-30	FA-15	
BAC15	7C-16	5A-16	7A-52	3R-32	FA-16	
BAC16	7C-10	5A-18	7A-20	3R-34	FA-17	

BAC17	7C-08	5A-20	3R-36	FA-18				
BAC18	7C-06	5A-22	3R-38	FA-19				
BAC19	7C-04	5A-24	3R-42	FA-20				
BIR3	3R-44	7A-44	5B-76	7C-66				
BIR4	3R-46	7A-42	5B-50	7C-74				
BIR5	3R-48	7A-34	5B-52	7C-72				
BIR6	3R-50	7A-36	5B-60	7C-62				
BIR7	3R-52	7A-32	5A-04	7C-60				
BL	5A-42	3R-54	FA-40					
BSEL	9B-06	2D-27						
CAL	5C-16	GND						
CIN	1C-3	4B-56						
CMAS-	2B-36	7B-56						
CM01	5C-52							
COMPLITE-		7A-55	1D-56					
CONVCOMND-		7B-26	9B-04					
CONT-	3C-10	7B-45						
COUT	1A-72	4A-68	3B-42					
CRAS-	2B-38	3C-48						
CRT	3C-4	1D-66						
CRTREAL	3C-1	1D-68						
DIGIN-	1D-72							
DIGOUT-	1D-74							
DISABLE-		3C-24	7B-46					
DISVD-	1D-44							
DP	2A-49	3B-22	4C-24					
DPASEL	7A-63	2D-23						
DPBSEL	7A-61	2D-25						
DPLITE	2D-33	4C-28	FA-46					
DPSHIF-	4A-14	3B-16						
DPSTOPLITE		2D-35	4C-30	FA-47				
DUAL	7B-32	9A-25						
DWELL	3C-7	7A-18						
DWELLCLK		7C-48	9A-60					
ENABTTY	11B-60	TTY-4						
FDATA-	11B-42	TTY-2						
GDB	1A-71	3C-68						
GO	3C-2	5A-56						
HDP	3A-60	4B-5						
HOLD	3A-62	4C-34						
HP	3A-70	4A-49						
HQGND	5A-60-62-64-66		PWR-11-14					
ICO	3A-66	4A-10	7A-30	5B-64	7C-64	2D-53		
IMHER-	2E-52	2F-52	2G-52	2A-10	1R-52			
INTENSIFY		5A-65	5C-44					
IOP	3R-56	4A-17	11B-56	FB-07				
IOP1	3R-58	4A-43	3B-74	7A-10	11C-06	7C-70	5C-26	2D-55
IOP2	3R-60	4A-45	3B-60	7A-12	7B-1	11C-68	5C-32	2D-45
IOP3	3R-62	4A-47	3B-70	7A-04	11C-64	7C-58	5C-56	2D-47
IOP1	3B-74	4A-43	FB-40					
IOP2	3B-60	4A-45						
IOP3	3B-70	4A-47	FB-44					
IPA	7A-59	9A-23						
IPC	2C-49	4B-63	4A-34	3B-64				
IR0	2C-15	3B-24	4A-70	FB-21				
IR0-	2C-30							

IR1	2C-11	3B-28	4A-66	FB-22		
IR1-	2C-20					
IR2	2C-13	3B-26	4A-62	FB-24		
IR2-	2C-22					
IR3	2D-41	2C-9	3B-30	11B-46	4A-60	FB-11
IR3-	2C-18	5B-74	11B-44			
IR4	2D-57	2C-7	4C-74	3B-4	4A-46	FB-02
IR4-	2C-16	3B-6	5B-72	11B-48		
IR5	2C-3	3B-14	11B-50	4A-52	FB-01	
IR5-	2D-59	2C-8	5B-70	4A-44		
IR6	2C-5	4A-26	3B-56	FB-05		
IR6-	2D-61	2C-10	5B-68	11B-52	4A-20	
IR7	2C-1	4A-18	3B-54	FB-06		
IR7-	2D-63	2C-2	11B-54	5A-2	4A-22	
IR8	2B-17	4A-12	FB-25			
IR8-	2B-14	4A-19	3B-50			
IR9	2B-15	4A-16	3B-48	FB-28		
IR9-	2C-76	4A-31				
IR10	2B-6	4A-32	FB-31			
IR10-	2B-4	4B-60				
IR11	2C-74	4B-73	3B-46	FB-32		
IR11-	2C-72	4B-62	4A-28			
IR12	2C-64	4A-24	FB-35			
IR12-	2C-70	4B-64				
IR13	2B-3	4B-72	FB-36			
IR13-	2C-58	4B-66				
IR14	2C-62	4B-74	4A-72	FB-39		
IR14-	2C-60	4B-68				
IR15	2B-1	3B-20	4B-76	FB-43		
IR15-	2C-52	3B-18	4B-70			
IR16	4B-69	FB-47				
IR17	4B-71	FA-37				
IR18	4B-11	FA-38				
IR19	4A-30	4B-67	FA-39			
IR19-	3B-44	4B-9				
ISAC19-	1A-64	4A-4				
IZ	5C-58					
KA	9A-43	2D-11				
KB	9A-59	2D-3				
L	4A-54	5A-44				
LAC	1A-74	4B-48	3B-1			
LCAC	1A-60	4B-50				
LCMB-	1C-24	4B-52				
LDMX-	7B-76	9A-21				
LLSH	1C-4	3C-72				
LMB-	1B-66	4B-54				
LONE	3A-64	1C-1				
LP0	1C-20	FA-21				
LP1	1C-21	FA-22				
LP2	1C-28	FA-23				
LP3	1C-42	FA-24				
LP4	1C-58	FA-25				
LP5	1C-60	FA-26				
LP6	1B-4	FA-27				
LP7	1B-14	FA-28				
LP8	1B-20	FA-29				

LP9	1B-32	FA-30					
LP10	1B-46	FA-31					
LP11	1B-60	FA-32					
LP12	1B-70	FA-33					
LP13	1A-4	FA-34					
LP14	1A-20	FA-35					
LP15	1A-10	FA-36					
LPC	1C-6	4B-57					
LREAD	2E-19	3E-17	6E-17				
LREAD	2F-19	3F-17	6F-17				
LREAD	2G-19	3G-17	6G-17				
LSH	1A-75	3C-70					
LWRITE	2E-33	3E-15	6E-15				
LWRITE	2F-33	3F-15	6F-15				
LWRITE	2G-33	3G-15	6G-15				
LSTROBE	1E-56	2E-23					
LSTROBE	1F-56	2F-23					
LSTROBE	1G-56	2G-23					
M-	3C-9	7B-74	9A-17				
MA0-	2C-65	3E-3	3F-3	3G-3	IR-47		
MA1-	2C-63	3E-5	3F-5	3G-5	IR-49		
MA2-	2C-47	3E-7	3F-7	3G-7	IR-51		
MA3-	2C-37	6E-3	6F-3	6G-3	IR-53		
MA4-	2C-61	6E-5	6F-5	6G-5	IR-55		
MA5-	2C-59	6E-7	6F-7	6G-7	IR-57		
MA6-	2C-35	6E-9	6F-9	6G-9	IR-59		
MA7-	2C-31	6E-11	6F-11	6G-11	IR-61		
MA8-	2B-55	6E-13	6F-13	6G-13	IR-63		
MA9-	2B-53	3E-9	3F-9	3G-9	IR-65		
MA10-	2B-45	3E-11	3F-11	3G-11	IR-67		
MA11-	2B-29	3E-13	3F-13	3G-13	IR-69		
MACRY	2A-32						
MASOF	2B-62	7B-70					
MAS1	2A-47	2D-42					
MAS2	2B-54	2D-38					
MAS4	2A-45	2D-48					
MAS8	2B-56	2D-32					
MB0	2C-32	1C-12	2E-6	2F-6	2G-6	IR-6	
MB1	2C-26	1C-22	2E-8	2F-8	2G-8	IR-8	
MB2	2C-28	1C-30	2E-10	2F-10	2G-10	IR-10	
MB3	2C-24	1C-52	2E-12	2F-12	2G-12	IR-12	
MB4	2C-14	1C-64	2E-14	2F-14	2G-14	IR-14	
MB5	2C-6	1C-76	2E-16	2F-16	2G-16	IR-16	
MB6	1B-6	2C-12	2E-18	2F-18	2G-18	IR-18	
MB7	1B-16	2C-4	2E-20	2F-20	2G-20	IR-20	
MB8	1B-22	2B-16	2E-22	2F-22	2G-22	IR-22	
MB9	2B-10	1B-34	2E-24	2F-24	2G-24	IR-24	
MB10	2B-12	1B-48	2E-56	2F-56	2G-56	IR-26	
MB11	2B-8	1B-62	2E-58	2F-58	2G-58	IR-28	
MB12	1B-72	2C-68	2E-60	2F-60	2G-60	IR-30	
MB13	1A-6	2C-56	2E-62	2F-62	2G-62	IR-32	
MB14	1A-12	2C-66	2E-64	2F-64	2G-64	IR-34	
MB15	7A-67	1A-22	2C-54	2E-66	2F-66	2G-66	IR-36
MB16	7A-69	1A-34	4B-32	2E-68	2F-68	2G-68	IR-38
MB17	7A-71	1A-46	4B-36	2E-70	2F-70	2G-70	IR-56
MB18	7A-73	1A-56	4B-30	2E-72	2F-72	2G-72	IR-58

MB19	7A-75	1A-70	4B-38	2E-74	2F-74	2G-74	IR-60
MLITE	3C-56	1D-58					
NXMLIT	2A-6	1D-60					
P6	3B-52	4C-32					
PC0	1C-14	2C-57					
PC1	1C-16	2C-55					
PC2	1C-34	2C-45					
PC3	1C-36	2C-43					
PC4	1C-68	2C-53					
PC5	1C-70	2C-51					
PC6	1B-8	2C-33					
PC7	1B-10	2C-29					
PC8	1B-26	2B-59					
PC9	1B-28	2B-51					
PC10	1B-52	2B-35					
PC11	1B-54	2B-33					
PC12	1B-74	2B-49					
PC13	1B-76	2B-47					
PC14	1A-14	2B-27					
PC15	1A-16	2B-25					
PP1-	9B-57	7B-69					
PSTART-	2D-67	4C-72	3R-67	FA-45			
RAC-	1C-54	4A-6					
RAC19-	1A-62	4A-8					
RASH	1A-73	3C-76					
RASOF	3C-6	2B-26					
RAS1	2B-52	2D-71					
RAS2	2B-58	2D-74					
RAS4	2B-50	2D-50					
RAS8	2B-60	2D-72					
REALPLOT		3C-5	1D-52				
READ	2E-54	2F-54	2G-54	2A-14	4B-16	IR-54	
REAR1	5A-43						
REAR2	5A-45						
REAR3	5A-47						
REAR4	5A-59						
REAR5	5A-61						
REAR6	5A-67						
REAR7	5A-69						
RECV DATA		11B-74	RS-02				
RECV DATA1		11B-72					
RECORD-	7B-72	9A-74					
REMADDSUB		7A-65	9A-64				
REMSTOP	7A-24	9A-62					
RLSH	1A-76	3C-74					
RMBL-	2A-18	1B-38	4B-3	3C-16			
RMBU-	1A-36	4B-1	3C-14				
RPC-	2B-23	2C-27	4C-17				
RS FLG OUT		11B-66					
RS FLG IN		11B-64					
RS JMP	RS-06	RS-08	RS-20				
RSH	1C-2	3B-2					
RXD-	3C-58	5C-10	7B-44				
SAC0-	3R-1	3A-16	9B-13	11B-2	1C-5	2D-73	FB-50
SAC1-	3R-3	3A-18	9B-9	11B-1	1C-15	2D-76	FB-49
SAC2-	3R-5	3A-20	9B-11	11B-3	1C-27	2D-54	FB-45

SAC3-	3R-7	3A-22	9B-5	11B-4	1C-43	2D-70	FB-38
SAC4-	3R-9	3A-24	9B-7	11B-8	1C-55	2D-62	FB-46
SAC5-	3R-11	3A-26	9B-1	11B-5	1C-69	2D-68	FB-42
SAC6-	3R-13	3A-28	9B-3	11B-7	1C-75	2D-60	FB-41
SAC7-	3R-15	3A-30	9B-15	11B-10	1B-3	2D-52	FB-34
SAC8-	3R-17	3A-32	9B-17	1B-13	2D-44	FB-37	
SAC9-	3R-19	3A-34	9B-19	1B-29	2D-36	FB-33	
SAC10-	3R-21	3A-36	9B-21	1B-41	2D-46	FB-26	
SAC11-	3R-23	3A-38	9B-23	1B-57	2D-34	FB-30	
SAC12-	3R-25	3A-42	9B-25	1B-69	2D-26	FB-27	
SAC13-	3R-27	1A-1	3A-44	9B-27	2D-28	FB-29	
SAC14-	3R-29	1A-05	3A-46	9B-29	2D-20	FB-20	
SAC15-	3R-31	1A-15	3A-48	9B-31	2D-18	FB-23	
SAC16-	3R-33	1A-27	3A-50	9B-33	2D-04	FB-19	
SAC17-	3R-35	1A-43	3A-52	9B-35	2D-12	FB-15	
SAC18-	3R-37	1A-55	3A-54	9B-37	2D-10	FB-12	
SAC19-	3R-41	3A-56	4A-27	9B-41	2D-02	FB-16	
SELECT	11B-62	TTY-1					
SEL0	2A-60	2E-50					
SEL1	2A-62	1R-62					
SEL10	2A-59	2G-50					
SEL11	2A-61	2F-50					
SEL12	2A-63	1R-64					
SEL13	2A-65	1R-66					
SEL14	2A-67	1R-68					
SEL15	2A-69	1R-70					
SEL16	2A-71	1R-72					
SEL17	2A-73	1R-74					
SHIFT-	3C-34	7B-34					
SKIP-	11C-58	7A-08	4A-29	3R-66	FB-10		
SMB0-	1C-7	1E-2	1F-2	1G-2	IR-3		
SMB1-	1C-23	1E-4	1F-4	1G-4	IR-5		
SMB2-	1C-35	1E-6	1F-6	1G-6	IR-7		
SMB3-	1C-49	1E-8	1F-8	1G-8	IR-9		
SMB4-	1C-63	1E-20	1F-20	1G-20	IR-11		
SMB5-	1C-73	1E-22	1F-22	1G-22	IR-13		
SMB6-	1B-1	1E-24	1F-24	1G-24	IR-15		
SMB7-	1B-9	1E-26	1F-26	1G-26	IR-17		
SMB8-	1B-21	1E-32	1F-32	1G-32	IR-19		
SMB9-	1B-37	1E-34	1F-34	1G-34	IR-21		
SMB10-	1B-49	1E-36	1F-36	1G-36	IR-23		
SMB11-	1B-65	1E-38	1F-38	1G-38	IR-25		
SMB12-	1B-75	1E-58	1F-58	1G-58	IR-27		
SMB13-	1A-3	1E-60	1F-60	1G-60	IR-29		
SMB14-	1A-7	1E-62	1F-62	1G-62	IR-31		
SMB15-	1A-23	1E-64	1F-64	1G-64	IR-33		
SMB16-	1A-35	1E-68	1F-68	1G-68	IR-35		
SMB17-	1A-51	1E-70	1F-70	1G-70	IR-37		
SMB18-	1A-63	1E-72	1F-72	1G-72	IR-43		
SMB19-	1A-69	1E-74	1F-74	1G-74	IR-45		
SRLITE-	7A-53	1D-54					
START-	4C-70	2D-65					
STOP-	3C-64	1D-50					
SWPFLG	7B-60	9A-66					
TAC	1B-56	3B-12					
TACKD-	5C-24						

TACYD-	3C-60	5C-30	7B-42		
TDAC	7B-24	9B-10			
TDBAC-	3B-10	4A-25			
TDBMB	1A-26	4B-46			
TIAPCL-	2C-41	4B-61			
TIAPCU-	2B-31	4B-44			
TMBIA-	2C-19	2B-21	4B-65		
TMBIR	2C-17	2B-19	4B-34		
TRAA	2A-58	3C-20			
TRFLAG	7B-66	9A-72			
TRHOLD-	7B-64	9A-76			
TRIGIN	7B-62	9A-68			
VD0	3B-38	1D-46			
VD1	3B-34	1D-42			
VD2	3B-36	1D-48			
VD3	3B-32	1D-28			
WRITE	4B-12	2E-48	2F-48	2G-48	IR-48
XAAS	7B-43	9A-70			
XADPC-	4B-7	3R-57	3B-76	FB-08	
XCIN-	4B-75	7B-54			
XIPC-	4A-13	3R-59	FA-43		
XLAC-	7B-52	4A-7	3R-49	FB-03	
XLCAC-	4A-5	7B-48			
XLCMB-	4A-1				
XLMB-	3C-18	7B-50	4A-3	3R-51	FA-41
XMIT DATA		11B-70	RS-03		
XMIT DATA1		11B-68			
XPNDISP-		5A-8			
XRAC-	7B-12	3B-62	4A-15	3R-43	FB-17
XREAD-	3C-12	7B-14	4B-18	3R-45	FB-14
XSTART-	4C-68	7B-68	3R-63	FB-48	
XSTOP-	2D-69	4C-66	7B-55	FA-42	
XTDBAC-	3C-38	7B-38	3B-8	3R-55	
XTDBMB-	3R-53	4A-9	7B-16	FB-13	
XTMBPC-	3R-61	4A-11	FB-18		
XWRITE-	3C-36	7B-10	4B-14	3R-47	FB-09
YPOSDISP-		5A-10			
ZERO	1A-38	4A-2			
1KM-	2B-64	2D-24			
2KM-	2B-66	2D-30			
4KM-	2B-68	2D-22			
8KM-	2B-70	2D-16			
1KR-	2B-28	2D-64			
2KR-	2B-34	2D-66			
4KR-	2B-32	2D-58			
8KR-	2B-30	2D-56			
1KXD	5C-5	1D-38			
2KXD	5C-7	1D-36			
4KXD	5C-9	1D-34			
8KXD	5C-11	1D-32			
16KXD	5C-13	1D-30			
2MHZ	3C-8	4C-36			

GND	PINNS 39-40-79-80			ALL BOARDS			
GND	1E,1F,1G,3E,3F,3G,6E,6F,6G, PINS 41-42						
GND	2E,2F,2G PINS1-2-41-42						
GND	PRW-3-5-7-		TTY-5	RS-01	RS-07		
+5	PINS 77-78		PRW-4-6-8				
+14	3E-36	3F-36	3G-36	6E-36	6F-36	6G-36	Z14
+15	5A-72	9A-51	9A-6	2D-7	11C-02		
+24	2E-3-4-75-76		2F-3-4-75-76		2G-3-4-75-76		PWR-15
3E-1	3F-1	3G-1	6E-1	6F-1	6G-1	1R-44	PWR-9
+50	5A-76	9A-05	PWR-16				
-5	1E-1	1F-1	1G-1	5A-46	PWR-2		
-15	5A-70	9A-47	9A-08	2D-9	TTY-3	PWR-12	11C-04
-50	5A-74	9A-01	PWR-13				

1080 SCHEMATIC INDEX

TITLE	Page
DATA REGISTER - BOARD 1	
Bits 0 - 9, Sheet 1 of 2	S- 1
Bits 10 - 19, Sheet 2 of 2	S- 2
ADDRESS REGISTER - BOARD 2	
8 LSB - Sheet 1 of 4	S- 3
8 MSB - Sheet 2 of 4	S- 4
Measure & Readout Scaler 1081-1085, Sheet 3 of 4	S- 5
Measure & Readout Scaler 1089, Sheet 4 of 4	S- 6
AUTO ARITHMETIC & CONTROL - BOARD 3	
Readout Control - Sheet 1 of 4	S- 7
Shift Control - Sheet 2 of 4	S- 8
Automatic Arithmetic - Sheet 3 of 4	S- 9
MQ Register - Sheet 4 of 4	S-10
DATA PROCESSOR CONTROL - BOARD 4	
IOP Generator Test & Miscellaneous - Sheet 1 of 3	S-11
Data Processor Control - Sheet 2 of 3	S-12
Program Pulser - Sheet 3 of 3	S-13
DISPLAY REGISTERS - BOARD 5	
Display Registers - Sheet 1 of 2	S-14
Display Register Control - Sheet 2 of 2	S-15
TELETYPE CONTROL BOARD 11	S-16
MEMORY BANK	
Sense Amplifier - Memory Board 1	S-17
Inhibit Driver - Memory Board 2	S-18
Address Driver - Memory Board 3	S-19
Address Driver - Memory Board 6	S-20
FRONT PANEL CONTROLS	S-21
AUTOSTOP DISPLAY/COUNTER/DRIVER	S-22
FRONT PANEL CONNECTOR - BOARD D-2	S-23
MODEL 290 DISPLAY/CONTROL	S-24
POWER SUPPLY (IN 290)	S-25
POWER SUPPLY (IN 1080E)	S-26
SD-82 ANALOG TO DIGITAL CONVERTER	
Analog Board - Location D	S-27
A/D Data Scaler - Location G	S-28
Control Logic - Location H	S-29
SW-80 SWEEP CONTROL	
Frequency Divider - Location C	S-30
Address Cursor - Location E	S-31
Ramp Generator - Location G	S-32
Control Logic - Location H	S-33

1080 SCHEMATIC INDEX (continued)

TITLE	Page
HIGH SPEED READER	
High Speed Paper Tape Reader	S-34
Hardware Loader	S-35
SD-81, SD-81/2 12-BIT DIGITIZER	
Analog Board - Location D	S-39
SD-81/2 - Location H	
Control Board - Location J	S-40
ADC Digital Board - Location L	S-41
Multiplexer (SD-81/2 only) - Location F	S-42
SD-88 BIOMATION TRANSIENT RECORDER	
Interface Board - Location L	S-43

BNC SERIES SCHEMATIC INDEX

TITLE	Page
DATA REGISTER - BOARD 1	
Bits 0 - 9, Sheet 1 of 2	S- 1
Bits 10 - 19, Sheet 2 of 2	S- 2
ADDRESS REGISTER - BOARD 2	
8 LSB - Sheet 1 of 4	S- 3
8 MSB - Sheet 2 of 4	S- 4
Measure & Readout Scaler 1081-1085, Sheet 3 of 4	S- 5
Measure & Readout Scaler for 1089, Sheet 4 of 4	S- 6
AUTO ARITHMETIC & CONTROL - BOARD 3	
Readout Control - Sheet 1 of 4	S- 7
Shift Control - Sheet 2 of 4	S- 8
Automatic Arithmetic - Sheet 3 of 4	S- 9
MQ Register - Sheet 4 of 4	S-10
DATA PROCESSOR CONTROL - BOARD 4	
IOP Generator Test & Miscellaneous - Sheet 1 of 3	S-11
Data Processor Control - Sheet 2 of 3	S-12
Program Pulser - Sheet 3 of 3	S-13
DISPLAY REGISTERS - BOARD 5	
Display Registers - Sheet 1 of 2	S-14
Display Register Control - Sheet 2 of 2	S-15
SWEEP CONTROL - BOARD 7	
BNC Series - Sheet 1 of 2	S-36
BNC Series - Sheet 2 of 2	S-37
ANALOG TO DIGITAL CONVERTER - BOARD 9	S-38
TELETYPE CONTROL BOARD 11	S-16
MEMORY BANK	
Sense Amplifier - Memory Board 1	S-17
Inhibit Driver - Memory Board 2	S-18
Address Driver - Memory Board 3	S-19
Address Driver - Memory Board 6	S-20
FRONT PANEL CONTROLS	S-21
AUTOSTOP DISPLAY/COUNTER/DRIVER	S-22
FRONT PANEL CONNECTOR - BOARD D-2	S-23
MODEL 290 DISPLAY/CONTROL	S-24
POWER SUPPLY (IN 290)	S-25
POWER SUPPLY (IN 1080E)	S-26
HIGH SPEED READER	
High Speed Paper Tape Reader	S-34
Hardware Loader	S-35

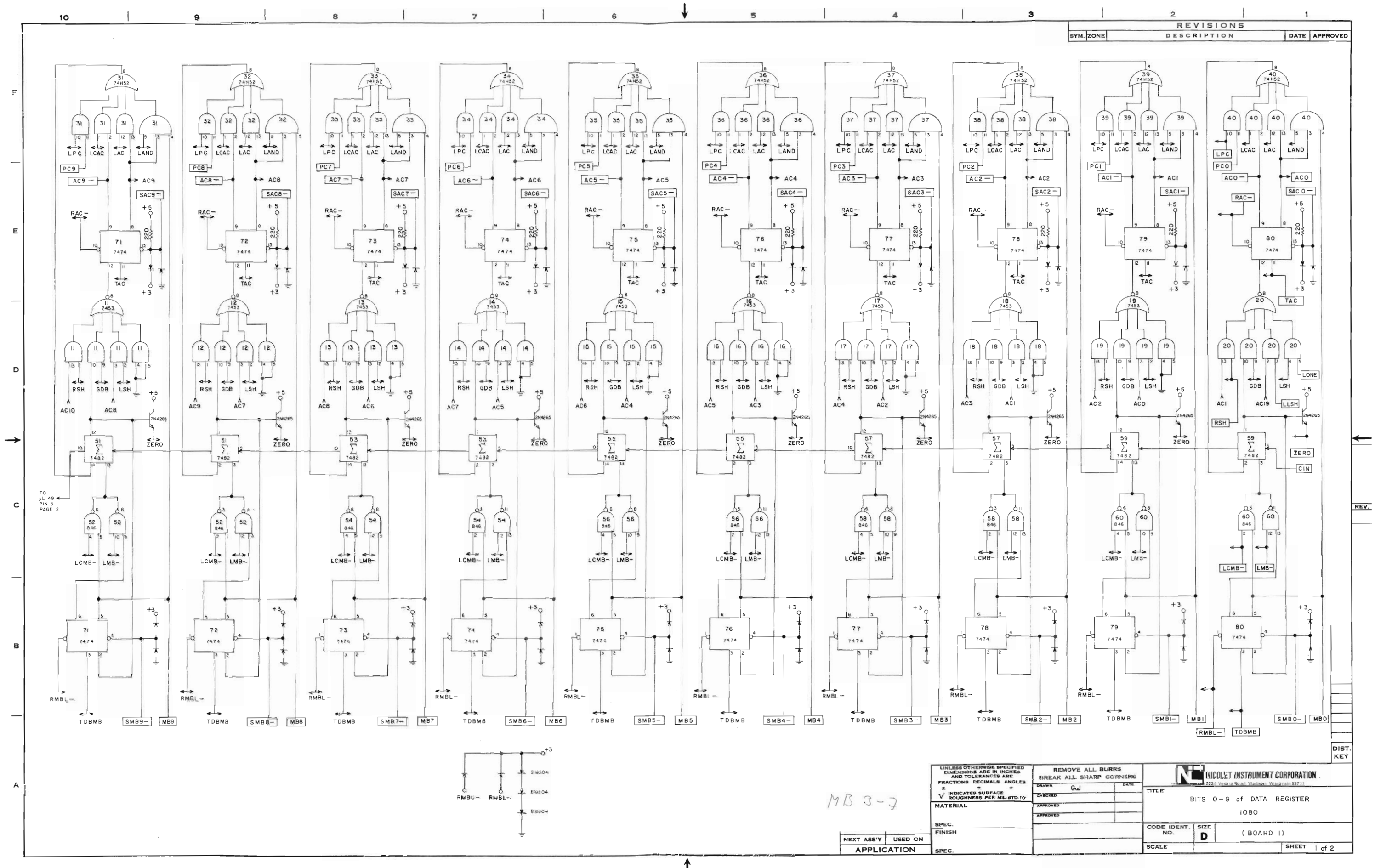
REVISIONS
SYM. ZONE DESCRIPTION DATE APPROVED
74H52
7474
7453
7482
846
2N4265
ZERO
LPC
LCAC
LAC
LAND
RAC
TAC
RSH
GDB
LSH
LONE
LLSH
CIN
LCMB
LMB
RMBL
TDBMB
TO μL 49 PIN 5 PAGE 2
REV.
DIST. KEY
MB 3-7
UNLESS OTHERWISE SPECIFIED DIMENSIONS ARE IN INCHES AND TOLERANCES ARE FRACTIONS DECIMALS ANGLES
INDICATES SURFACE ROUGHNESS PER MIL-STD-10
MATERIAL
SPEC.
FINISH
SPEC.
NEXT ASS'Y USED ON
APPLICATION
REMOVE ALL BURRS
BREAK ALL SHARP CORNERS
DRAWN GWJ DATE
CHECKED
APPROVED
APPROVED
NICOLET INSTRUMENT CORPORATION
5225 Veterans Road, Madison, Wisconsin 53711
TITLE
BITS 0-9 of DATA REGISTER
1080
CODE IDENT. NO.
SIZE D
(BOARD 1)
SCALE
SHEET 1 of 2

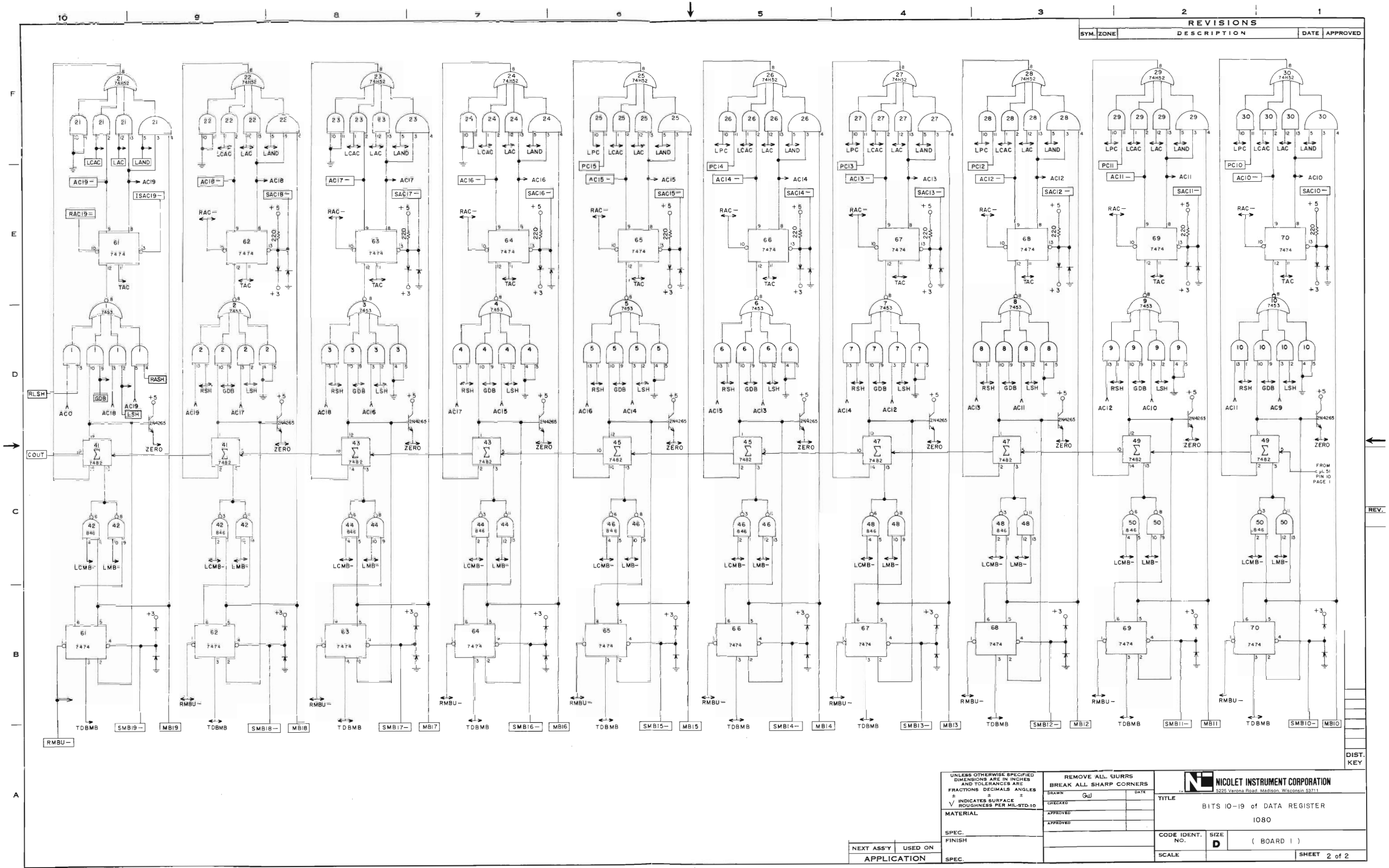
REVISIONS
SYM. ZONE DESCRIPTION DATE APPROVED
UNLESS OTHERWISE SPECIFIED DIMENSIONS ARE IN INCHES AND TOLERANCES ARE FRACTIONS DECIMALS ANGLES ± ± ±
√ INDICATES SURFACE ROUGHNESS PER MIL-STD-10
MATERIAL
SPEC.
FINISH
SPEC.
NEXT ASS'Y USED ON
APPLICATION
REMOVE ALL BURRS
BREAK ALL SHARP CORNERS
DRAWN GW DATE
CHECKED
APPROVED
APPROVED
NICOLET INSTRUMENT CORPORATION
5225 Verona Road, Madison, Wisconsin 53711
TITLE
BITS 10-19 of DATA REGISTER
1080
CODE IDENT. NO.
SIZE D
(BOARD 1)
SCALE
SHEET 2 of 2
DIST. KEY
REV.
FROM CPL 51 PIN 10 PAGE 1

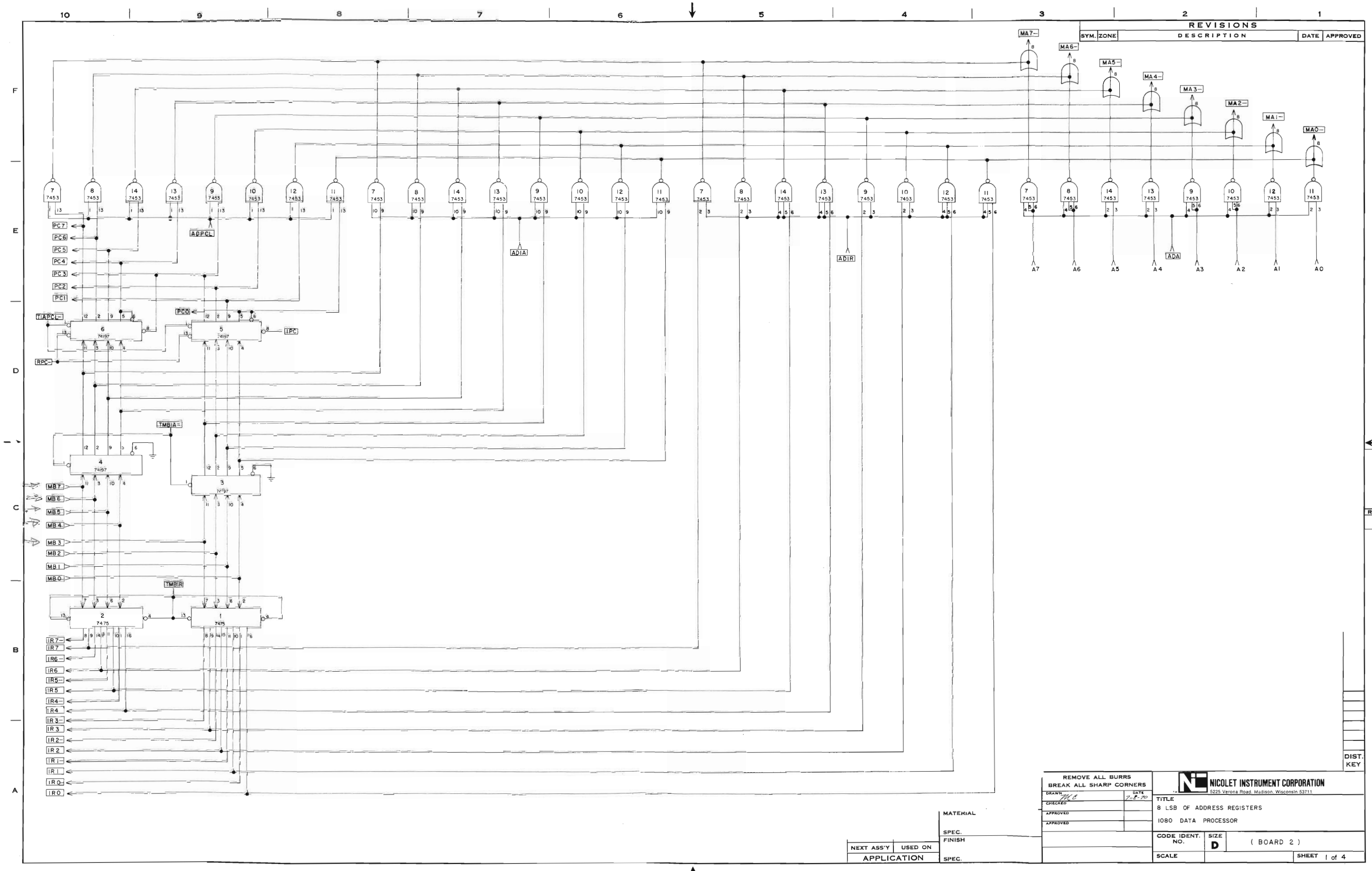
REVISIONS
SYM. ZONE DESCRIPTION DATE APPROVED
REV.
DIST. KEY
MA7–
MA6–
MA5–
MA4–
MA3–
MA2–
MA1–
MA0–
A7
A6
A5
A4
A3
A2
A1
A0
ADA
ADIA
ADIR
ADPCL
PC7
PC6
PC5
PC4
PC3
PC2
PC1
PC0
TIAPCL–
IPC
RPC–
TMBIA–
MB7
MB6
MB5
MB4
MB3
MB2
MB1
MB0
TMBIR
IR7–
IR7
IR6–
IR6
IR5–
IR5
IR4–
IR4
IR3–
IR3
IR2–
IR2
IR1–
IR1
IR0–
IR0
7453
74197
7475
REMOVE ALL BURRS
BREAK ALL SHARP CORNERS
DRAWN
DATE 7-8-70
CHECKED
APPROVED
APPROVED
MATERIAL
SPEC.
FINISH
SPEC.
NEXT ASS'Y
USED ON
APPLICATION
NICOLET INSTRUMENT CORPORATION
5225 Verona Road, Madison, Wisconsin 53711
TITLE
8 LSB OF ADDRESS REGISTERS
1080 DATA PROCESSOR
CODE IDENT. NO.
SIZE D
(BOARD 2)
SCALE
SHEET 1 of 4

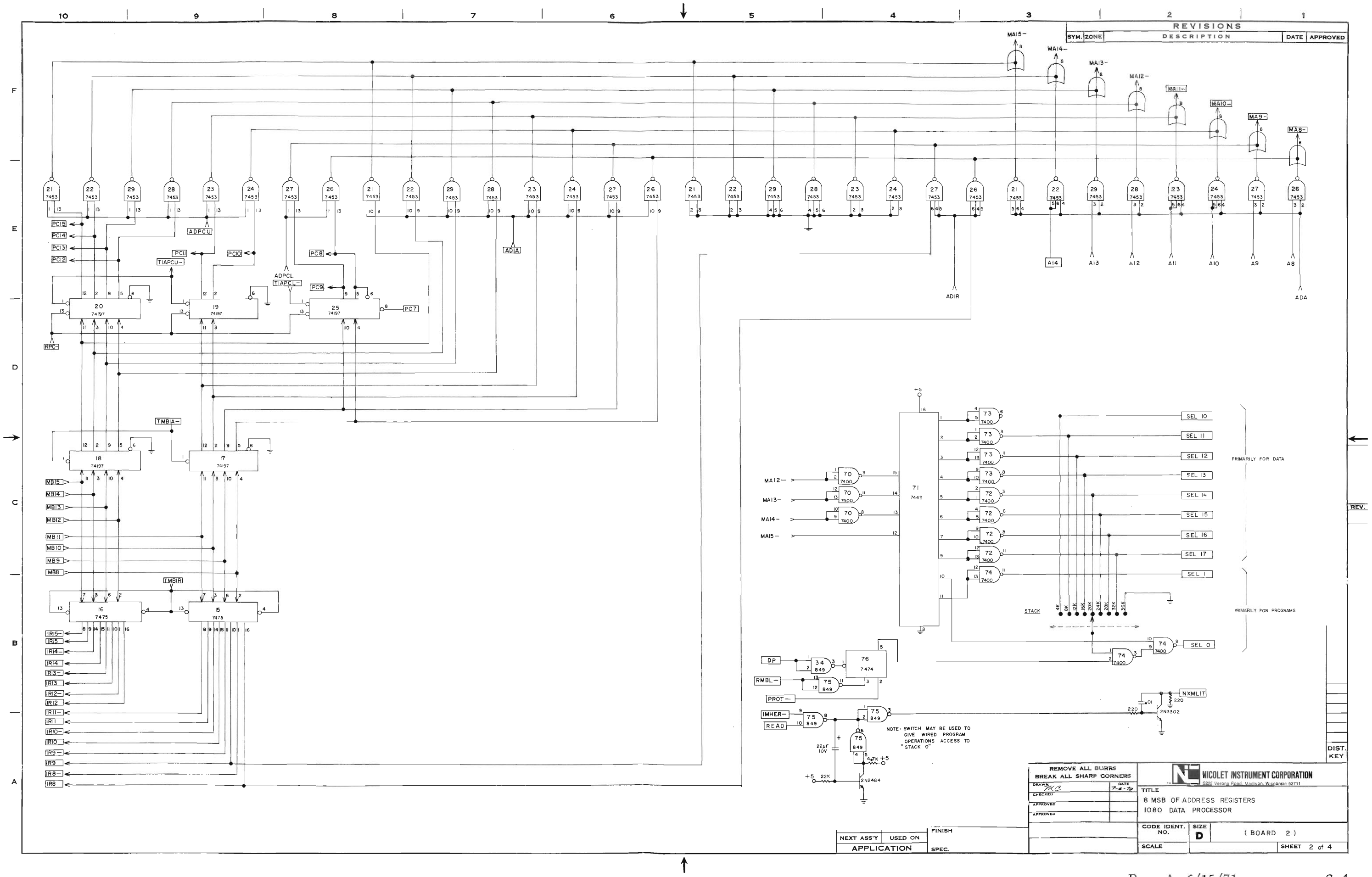
REVISIONS
SYM. ZONE DESCRIPTION DATE APPROVED
MA15–
MA14–
MA13–
MA12–
MA11–
MA10–
MA9–
MA8–
A14
A13
A12
A11
A10
A9
A8
ADA
ADIR
PC15
PC14
PC13
PC12
ADPCU
PC11
PC10
TIAPCU–
PC8
ADPCL
TIAPCL–
PC9
PC7
ADIA
RPC–
TMBIA–
MB15
MB14
MB13
MB12
MB11
MB10
MB9
MB8
TMBIR
IR15–
IR15
IR14–
IR14
IR13–
IR13
IR12–
IR12
IR11–
IR11
IR10–
IR10
IR9–
IR9
IR8–
IR8
SEL 10
SEL 11
SEL 12
SEL 13
SEL 14
SEL 15
SEL 16
SEL 17
SEL 1
SEL 0
PRIMARILY FOR DATA
PRIMARILY FOR PROGRAMS
STACK
4K
8K
12K
16K
20K
24K
28K
32K
36K
DP
RMBL–
PROT–
IMHER–
READ
NOTE: SWITCH MAY BE USED TO GIVE WIRED PROGRAM OPERATIONS ACCESS TO "STACK 0"
NXMLIT
2N3302
2N2484
REMOVE ALL BURRS
BREAK ALL SHARP CORNERS
MICOLET INSTRUMENT CORPORATION
5225 Verona Road, Madison, Wisconsin 53711
TITLE
8 MSB OF ADDRESS REGISTERS
1080 DATA PROCESSOR
CODE IDENT. NO.
SIZE D
(BOARD 2)
SCALE
SHEET 2 of 4
NEXT ASS'Y
USED ON
APPLICATION
FINISH
SPEC.
DIST.
KEY
REV.

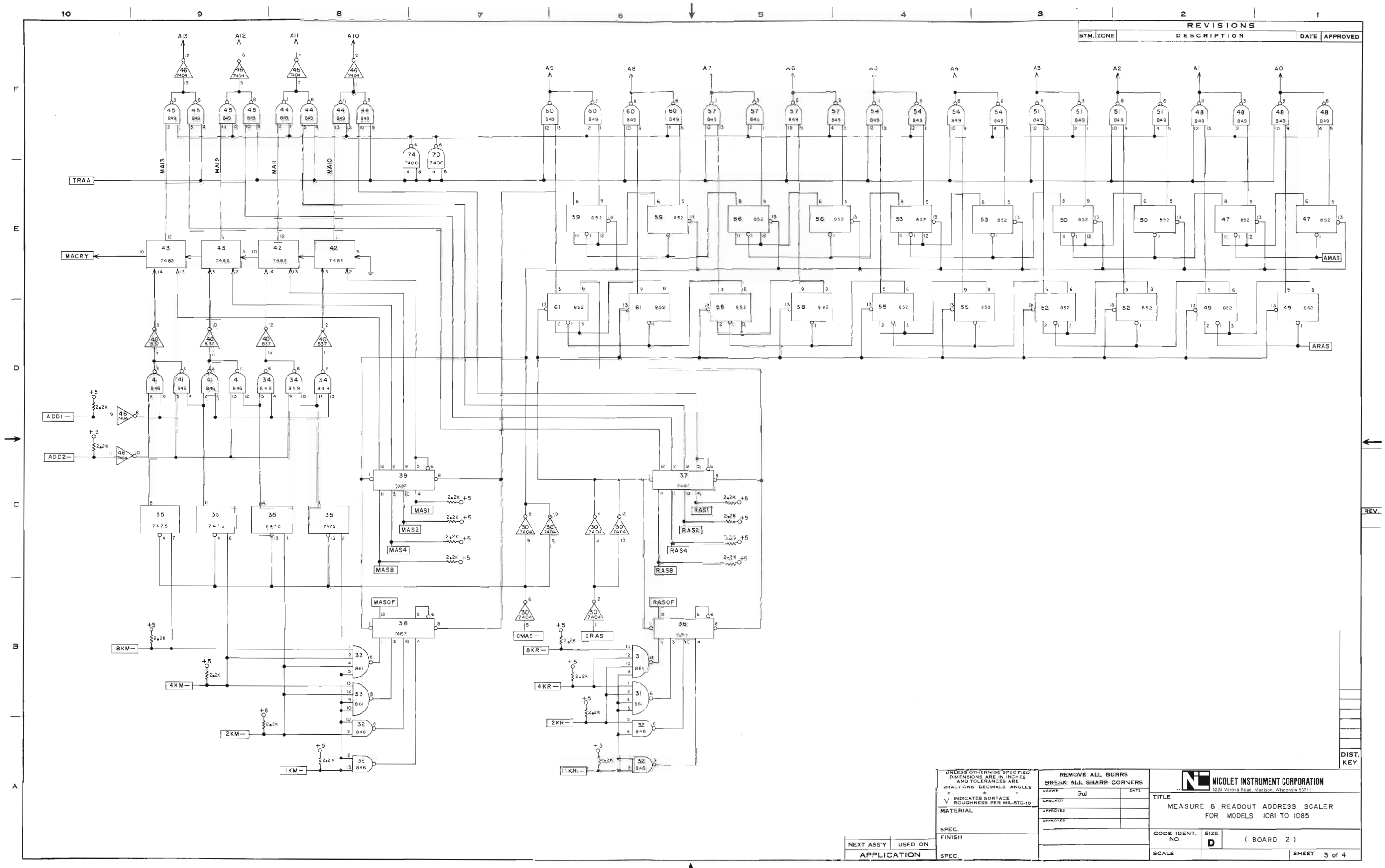
REVISIONS
SYM. ZONE DESCRIPTION DATE APPROVED
TRAA
MACRY
AMAS
ARAS
ADD1—
ADD2—
MAS1
MAS2
MAS4
MAS8
MASOF
RAS1
RAS2
RAS4
RAS8
RASOF
CMAS—
CRAS—
8KM—
4KM—
2KM—
1KM—
8KR—
4KR—
2KR—
1KR—
REV.
DIST. KEY
UNLESS OTHERWISE SPECIFIED DIMENSIONS ARE IN INCHES AND TOLERANCES ARE FRACTIONS DECIMALS ANGLES
INDICATES SURFACE ROUGHNESS PER MIL-STD-10
MATERIAL
SPEC.
FINISH
SPEC.
NEXT ASS'Y
USED ON
APPLICATION
REMOVE ALL BURRS
BREAK ALL SHARP CORNERS
DRAWN Gul DATE
CHECKED
APPROVED
APPROVED
NICOLET INSTRUMENT CORPORATION
5225 Verona Road, Madison, Wisconsin 53711
TITLE
MEASURE & READOUT ADDRESS SCALER
FOR MODELS 1081 TO 1085
CODE IDENT. NO.
SIZE D
(BOARD 2)
SCALE
SHEET 3 of 4

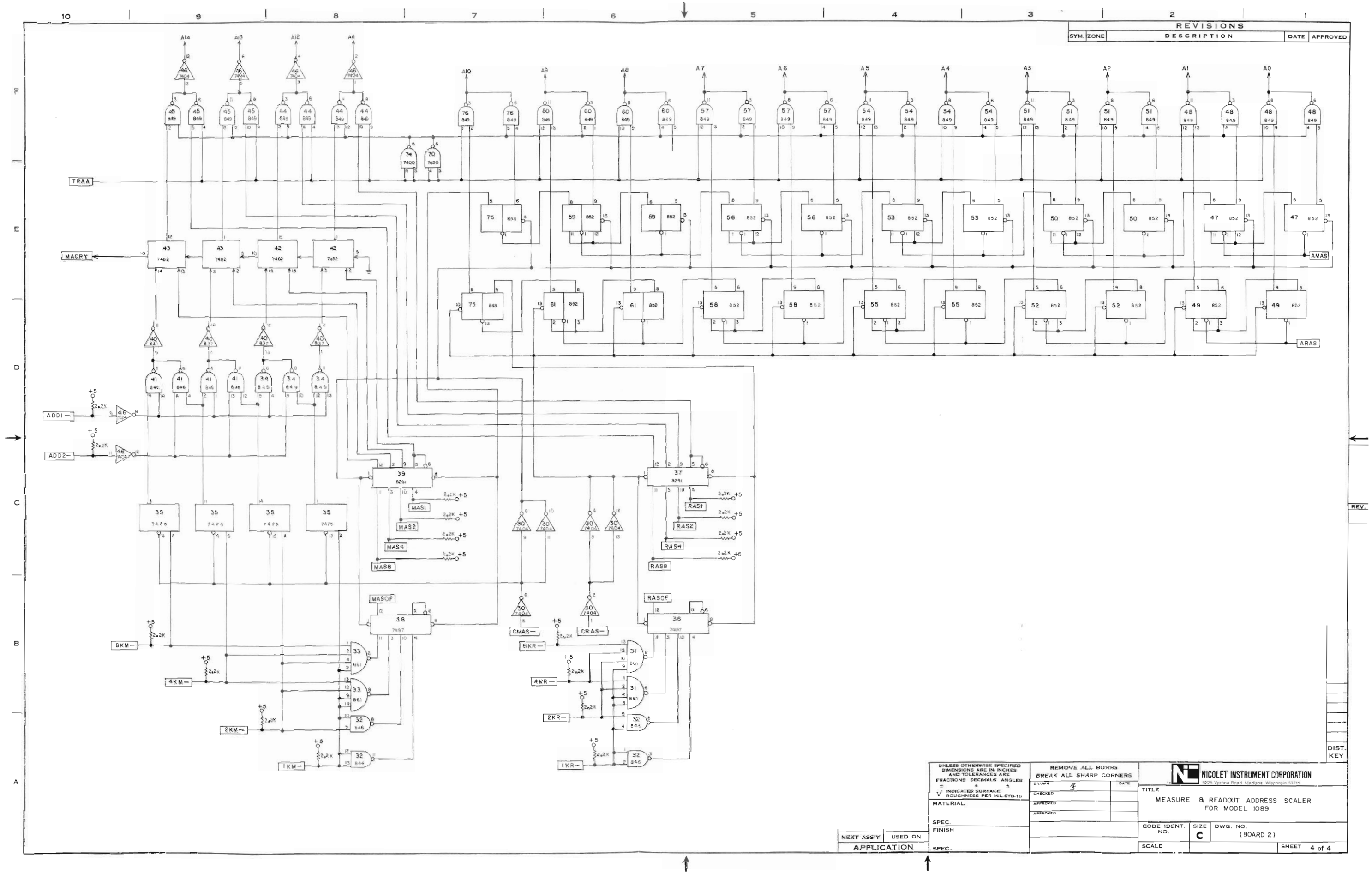
REVISIONS
SYM. ZONE DESCRIPTION DATE APPROVED
TRAA
MACRY
AMAS
ARAS
ADD1—
ADD2—
MAS1
MAS2
MAS4
MAS8
MASOF
RAS1
RAS2
RAS4
RAS8
RASOF
CMAS—
CRAS—
8KM—
4KM—
2KM—
1KM—
8KR—
4KR—
2KR—
1KR—
REV.
DIST. KEY
UNLESS OTHERWISE SPECIFIED DIMENSIONS ARE IN INCHES AND TOLERANCES ARE: FRACTIONS DECIMALS ANGLES ± ± ± INDICATES SURFACE ROUGHNESS PER MIL-STD-10
MATERIAL
SPEC.
FINISH
SPEC.
NEXT ASS'Y USED ON
APPLICATION
REMOVE ALL BURRS
BREAK ALL SHARP CORNERS
DRAWN DATE
CHECKED
APPROVED
APPROVED
NICOLET INSTRUMENT CORPORATION
5225 Verona Road, Madison, Wisconsin 53711
TITLE
MEASURE & READOUT ADDRESS SCALER
FOR MODEL 1089
CODE IDENT. NO.
SIZE C
DWG. NO. (BOARD 2)
SCALE
SHEET 4 of 4

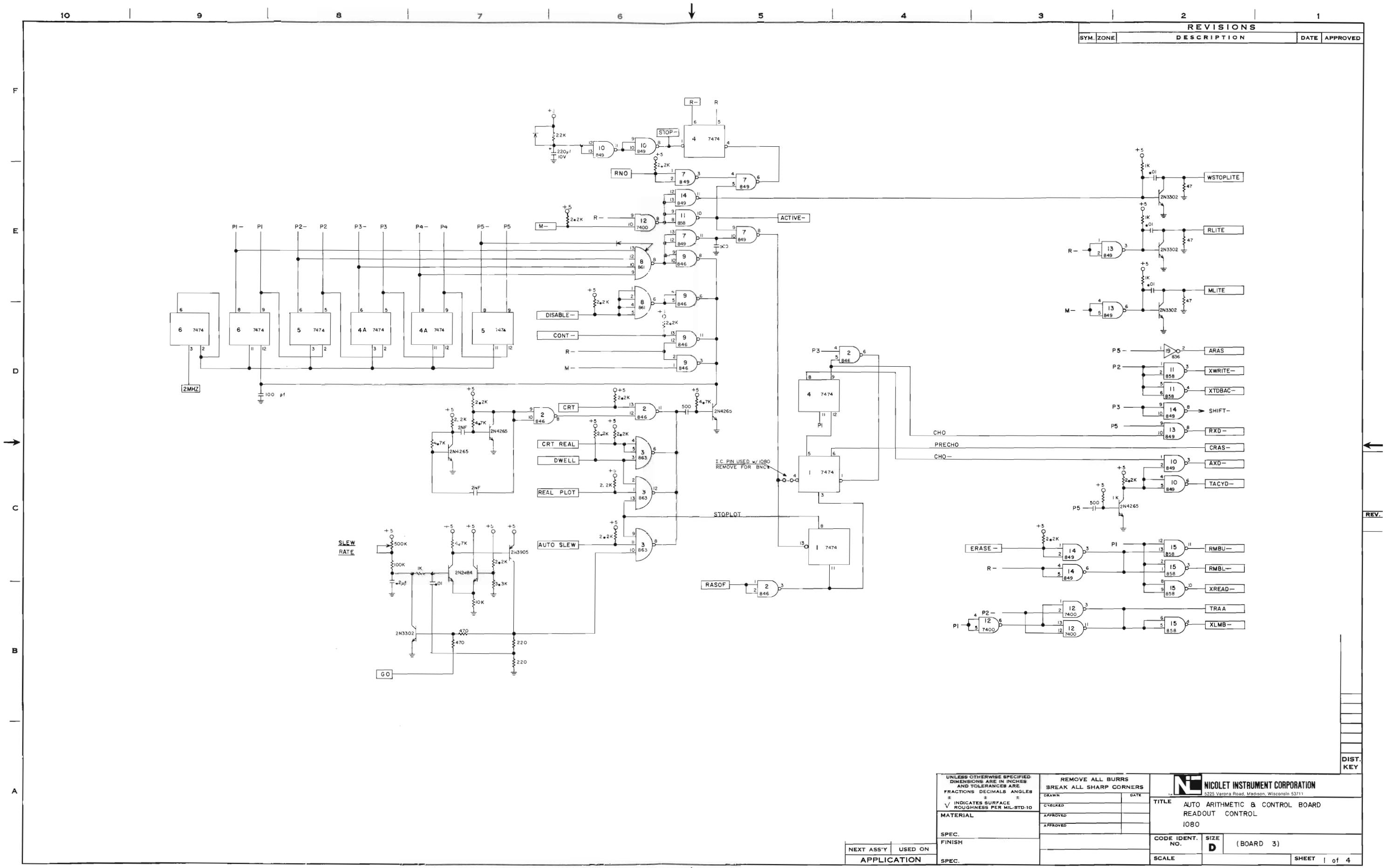
REVISIONS
SYM. ZONE DESCRIPTION DATE APPROVED
STOP–
RNO
ACTIVE–
WSTOPLITE
RLITE
MLITE
DISABLE–
CONT–
2MHZ
CRT
CRT REAL
DWELL
REAL PLOT
AUTO SLEW
SLEW RATE
GO
STOPLOT
RASOF
I.C. PIN USED w/1080 REMOVE FOR BNCY
ARAS
XWRITE–
XTDBAC–
SHIFT–
RXD–
CRAS–
AXD–
TACYD–
RMBU–
RMBL–
XREAD–
TRAA
XLMB–
ERASE–
CHO
PRECHO
CHO–
UNLESS OTHERWISE SPECIFIED DIMENSIONS ARE IN INCHES AND TOLERANCES ARE FRACTIONS DECIMALS ANGLES
INDICATES SURFACE ROUGHNESS PER MIL-STD-10
MATERIAL
SPEC.
FINISH
SPEC.
REMOVE ALL BURRS BREAK ALL SHARP CORNERS
DRAWN
CHECKED
APPROVED
APPROVED
NICOLET INSTRUMENT CORPORATION
5225 Verona Road, Madison, Wisconsin 53711
TITLE AUTO ARITHMETIC & CONTROL BOARD READOUT CONTROL 1080
CODE IDENT. NO.
SIZE D
(BOARD 3)
SCALE
SHEET 1 of 4
NEXT ASS'Y USED ON
APPLICATION
DIST. KEY
REV.

REVISIONS				
SYM.	ZONE	DESCRIPTION	DATE	APPROVED

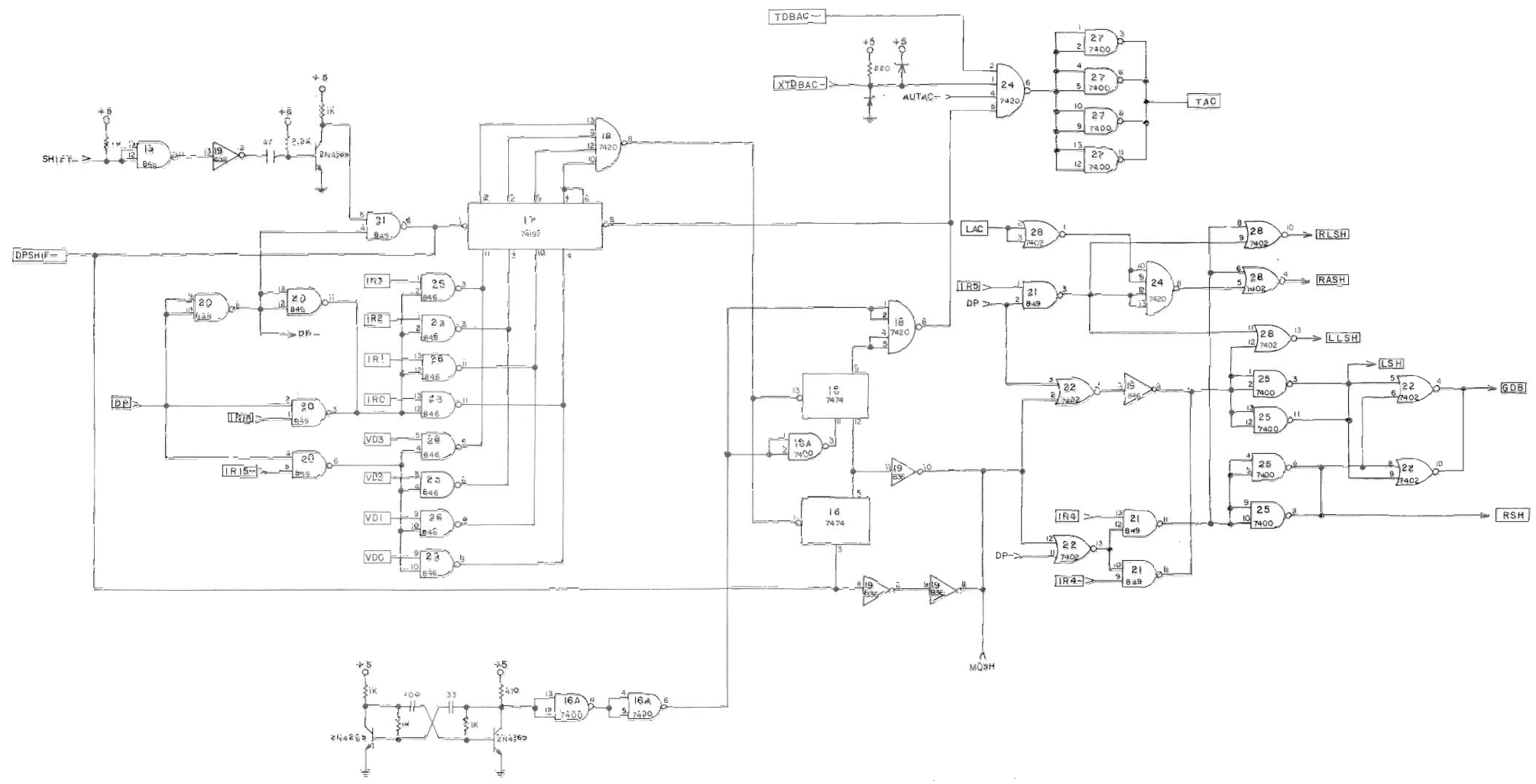

NEXT ASS'Y	USED ON
APPLICATION	

UNLESS OTHERWISE SPECIFIED DIMENSIONS ARE IN INCHES AND TOLERANCES ARE FRACTIONS ± DECIMALS ± ANGLES ±
√ INDICATES SURFACE ROUGHNESS PER SAE-STD-10

MATERIAL
SPEC.
FINISH
SPEC.

REMOVE ALL BURRS
BREAK ALL SHARP CORNERS

		DATE
DRAWN		
CHECKED		
APPROVED		
APPROVED		

NICOLET INSTRUMENT CORPORATION
5225 Verona Road, Madison, Wisconsin 53711

TITLE AUTO ARITHMETIC & CONTROL BOARD
SHIFT CONTROL
1080

CODE IDENT. NO. | SIZE D | (BOARD 3)
SCALE | SHEET 2 of 4

DIST. KEY

REV.

REVISIONS				
SYM.	ZONE	DESCRIPTION	DATE	APPROVED

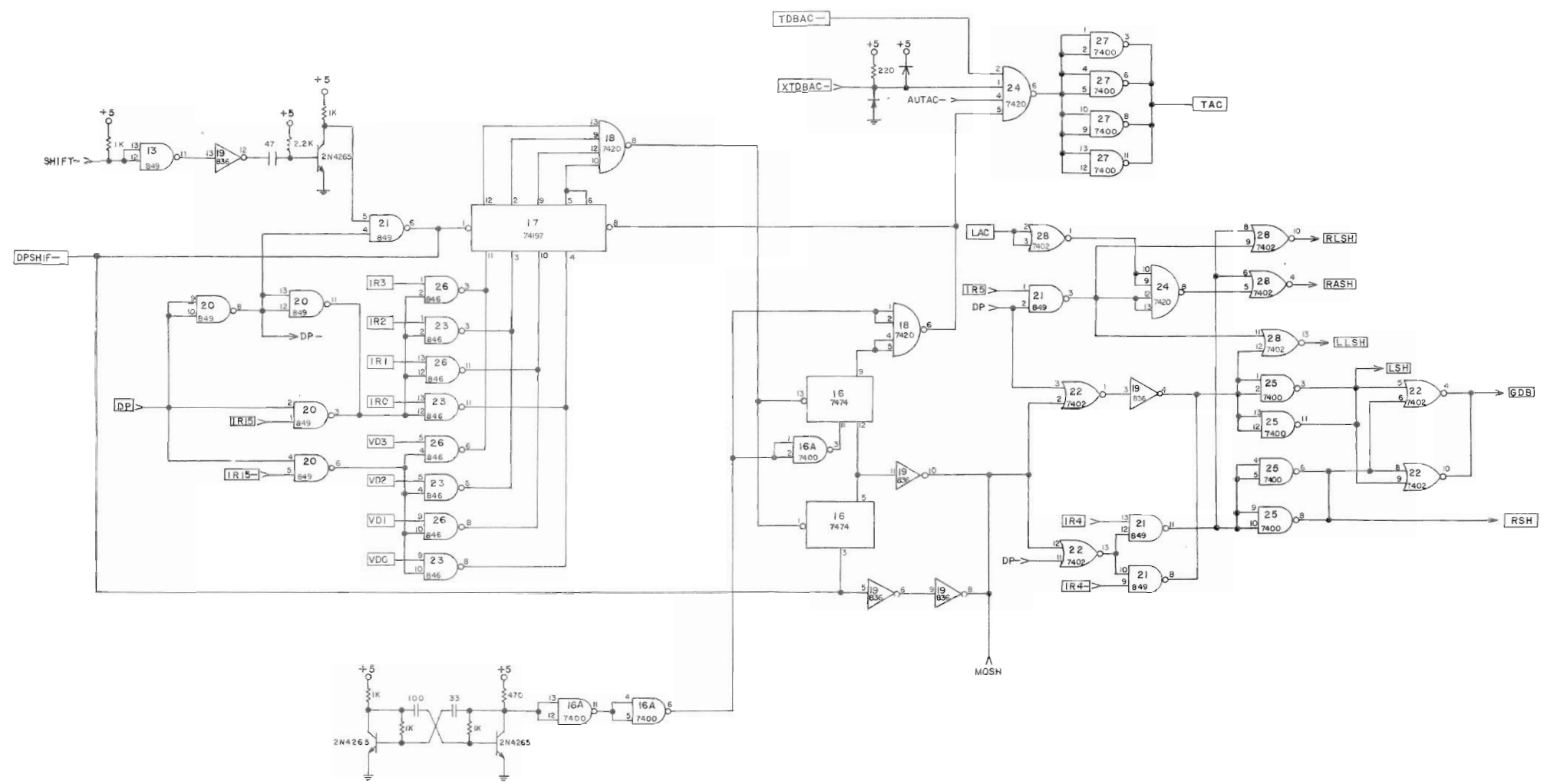

NEXT ASS'Y	USED ON
APPLICATION	

UNLESS OTHERWISE SPECIFIED DIMENSIONS ARE IN INCHES AND TOLERANCES ARE FRACTIONS ± DECIMALS ± ANGLES ± √ INDICATES SURFACE ROUGHNESS PER MIL-STD-10

MATERIAL SPEC.

FINISH SPEC.

REMOVE ALL BURRS
BREAK ALL SHARP CORNERS

DRAWN DATE
CHECKED
APPROVED
APPROVED

NICOLET INSTRUMENT CORPORATION
5225 Verona Road, Madison, Wisconsin 53711

TITLE AUTO ARITHMETIC & CONTROL BOARD
SHIFT CONTROL
1080

CODE IDENT. NO. | SIZE D | (BOARD 3)

SCALE | SHEET 2 of 4

REV.

DIST. KEY

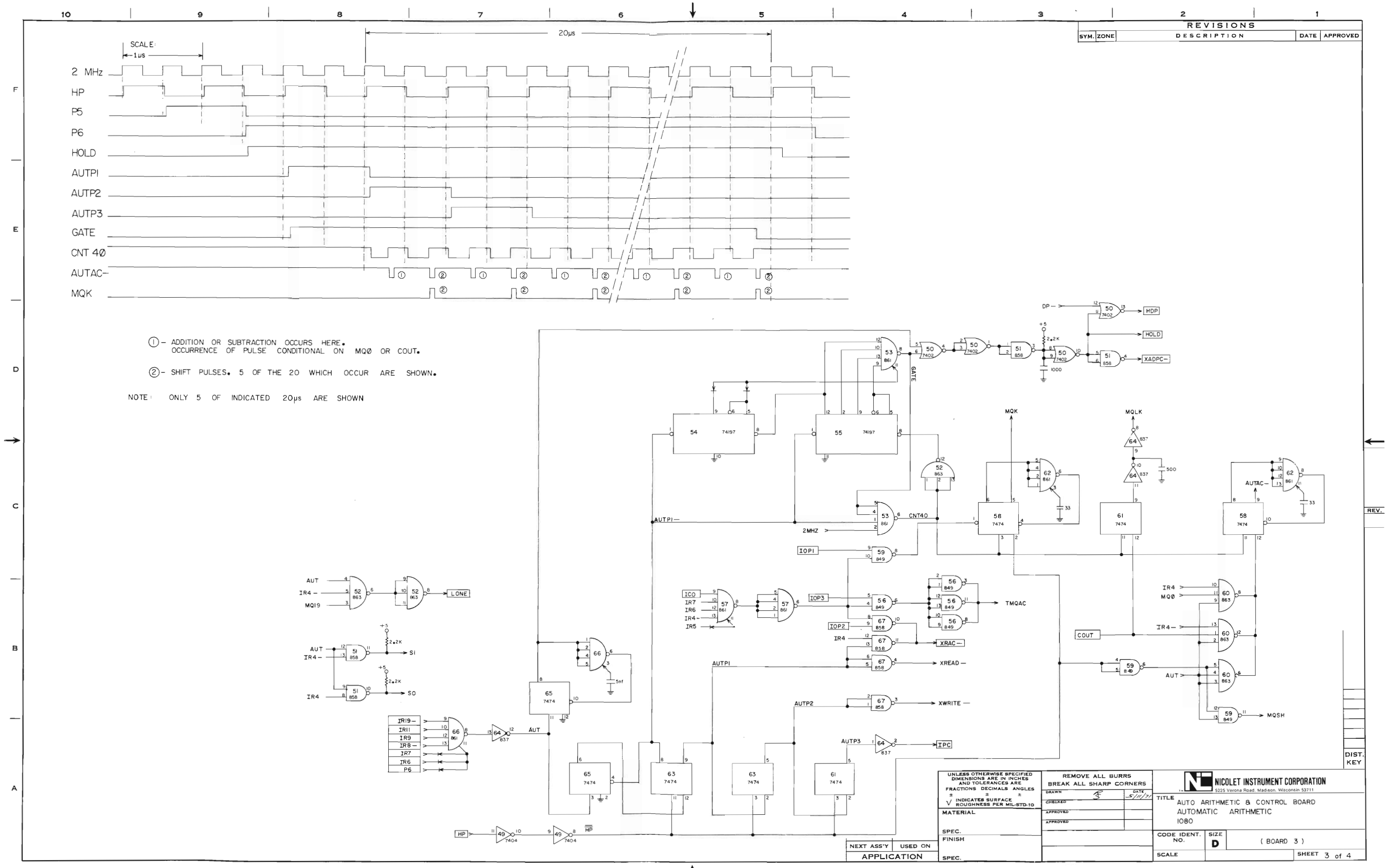
REVISIONS
SYM. ZONE DESCRIPTION DATE APPROVED
SCALE: 1μs
20μs
2 MHz
HP
P5
P6
HOLD
AUTP1
AUTP2
AUTP3
GATE
CNT 40
AUTAC–
MQK
① – ADDITION OR SUBTRACTION OCCURS HERE. OCCURRENCE OF PULSE CONDITIONAL ON MQØ OR COUT.
② – SHIFT PULSES. 5 OF THE 20 WHICH OCCUR ARE SHOWN.
NOTE: ONLY 5 OF INDICATED 20μs ARE SHOWN
DP –
HDP
HOLD
XADPC–
MQLK
AUTAC–
LONE
SI
SO
IR19–
IR11
IR9
IR8–
IR7
IR6
P6
AUT
IR4 –
MQ19
ICO
IR7
IR6
IR4–
IR5
IOP1
IOP3
IOP2
IR4
XRAC–
XREAD–
XWRITE–
IPC
TMQAC
COUT
MQØ
MQSH
2MHZ
CNT40
AUTP1
AUTP2
AUTP3
GATE
MQK
HP
NEXT ASS'Y
USED ON
APPLICATION
UNLESS OTHERWISE SPECIFIED DIMENSIONS ARE IN INCHES AND TOLERANCES ARE FRACTIONS DECIMALS ANGLES ± ± ±
√ INDICATES SURFACE ROUGHNESS PER MIL-STD-10
MATERIAL
SPEC.
FINISH
SPEC.
REMOVE ALL BURRS
BREAK ALL SHARP CORNERS
DRAWN
CHECKED
APPROVED
APPROVED
NICOLET INSTRUMENT CORPORATION
5225 Verona Road, Madison, Wisconsin 53711
TITLE
AUTO ARITHMETIC & CONTROL BOARD
AUTOMATIC ARITHMETIC
1080
CODE IDENT. NO.
SIZE D
(BOARD 3)
SCALE
SHEET 3 of 4
REV.
DIST. KEY

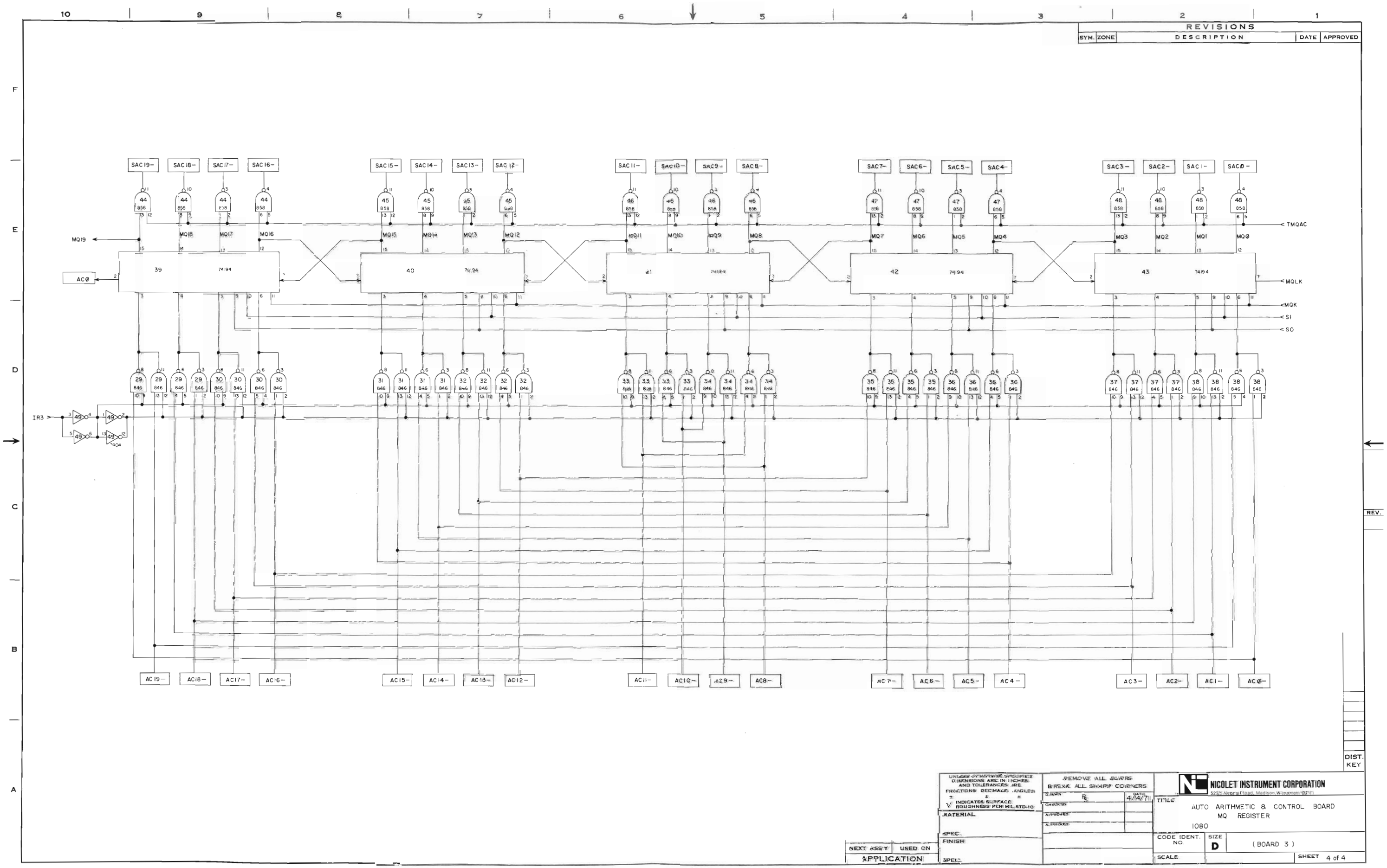
REVISIONS
SYM. ZONE DESCRIPTION DATE APPROVED
SAC19– SAC18– SAC17– SAC16– SAC15– SAC14– SAC13– SAC12– SAC11– SAC10– SAC9– SAC8– SAC7– SAC6– SAC5– SAC4– SAC3– SAC2– SAC1– SAC0–
MQ19
AC0
MQ18 MQ17 MQ16 MQ15 MQ14 MQ13 MQ12 MQ11 MQ10 MQ9 MQ8 MQ7 MQ6 MQ5 MQ4 MQ3 MQ2 MQ1 MQ0
39 40 41 42 43
74194
TMQAC
MQLK
MQK
SI
SO
IR3
7404
AC19– AC18– AC17– AC16– AC15– AC14– AC13– AC12– AC11– AC10– AC9– AC8– AC7– AC6– AC5– AC4– AC3– AC2– AC1– AC0–
DIST. KEY
REV.
UNLESS OTHERWISE SPECIFIED DIMENSIONS ARE IN INCHES AND TOLERANCES ARE FRACTIONS ± DECIMALS ± ANGLES ±
INDICATES SURFACE ROUGHNESS PER MIL-STD-10
MATERIAL
SPEC.
FINISH
SPEC.
NEXT ASS'Y USED ON
APPLICATION
REMOVE ALL BURRS
BREAK ALL SHARP CORNERS
DRAWN R. DATE 4/14/71
CHECKED
APPROVED
APPROVED
NICOLET INSTRUMENT CORPORATION
5225 Nesbitt Road, Madison, Wisconsin 53711
TITLE
AUTO ARITHMETIC & CONTROL BOARD
MQ REGISTER
1080
CODE IDENT. NO.
SIZE D
(BOARD 3)
SCALE
SHEET 4 of 4

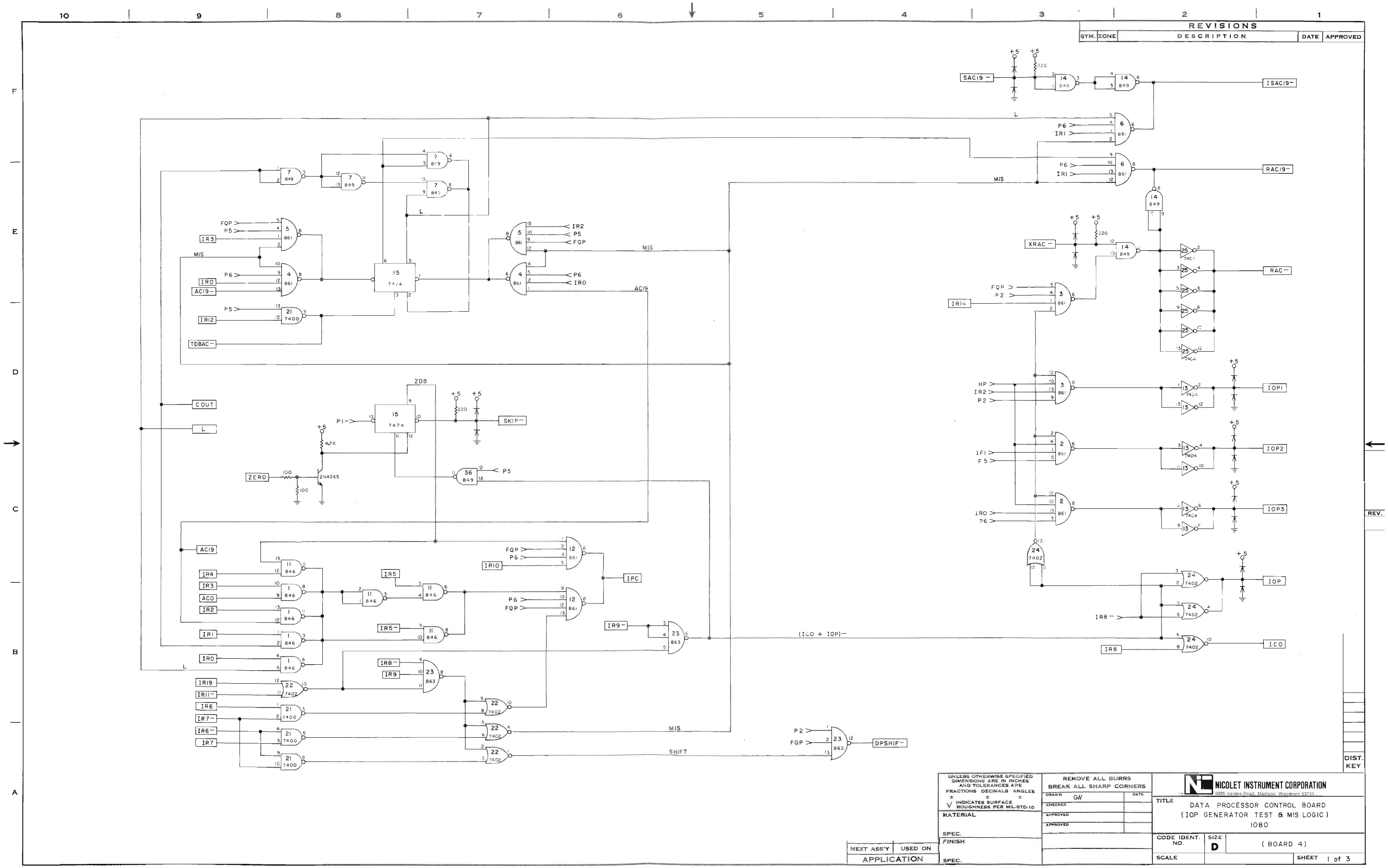
REVISIONS
SYM. ZONE DESCRIPTION DATE APPROVED
SAC19 −
ISAC19−
RAC19−
XRAC −
RAC−
IOP1
IOP2
IOP3
IOP
ICO
IR8 −
IR8
IR14
HP
IR2
P2
IF1
F5
IR0
P6
P6
IR1
MIS
L
FQP
P5
IR3
IR0
AC19 −
IR2
TDBAC−
AC19
COUT
ZDB
P1 −
SKIP−
ZERO
2N4265
P5
IR4
IR3
AC0
IR1
IR5
IR5−
IR10
IPC
IR9−
(ICO + IOP)−
IR19
IR11−
IR6
IR7−
IR7
SHIFT
DPSHIF−
DIST. KEY
REV.
UNLESS OTHERWISE SPECIFIED DIMENSIONS ARE IN INCHES AND TOLERANCES ARE
FRACTIONS DECIMALS ANGLES
± ± ±
√ INDICATES SURFACE ROUGHNESS PER MIL-STD-10
MATERIAL
SPEC.
FINISH
SPEC.
NEXT ASS'Y USED ON
APPLICATION
REMOVE ALL BURRS
BREAK ALL SHARP CORNERS
DRAWN GW DATE
CHECKED
APPROVED
APPROVED
NICOLET INSTRUMENT CORPORATION
5225 Verona Road, Madison, Wisconsin 53711
TITLE
DATA PROCESSOR CONTROL BOARD
(IOP GENERATOR TEST & MIS LOGIC)
1080
CODE IDENT. NO.
SIZE D
(BOARD 4)
SCALE
SHEET 1 of 3

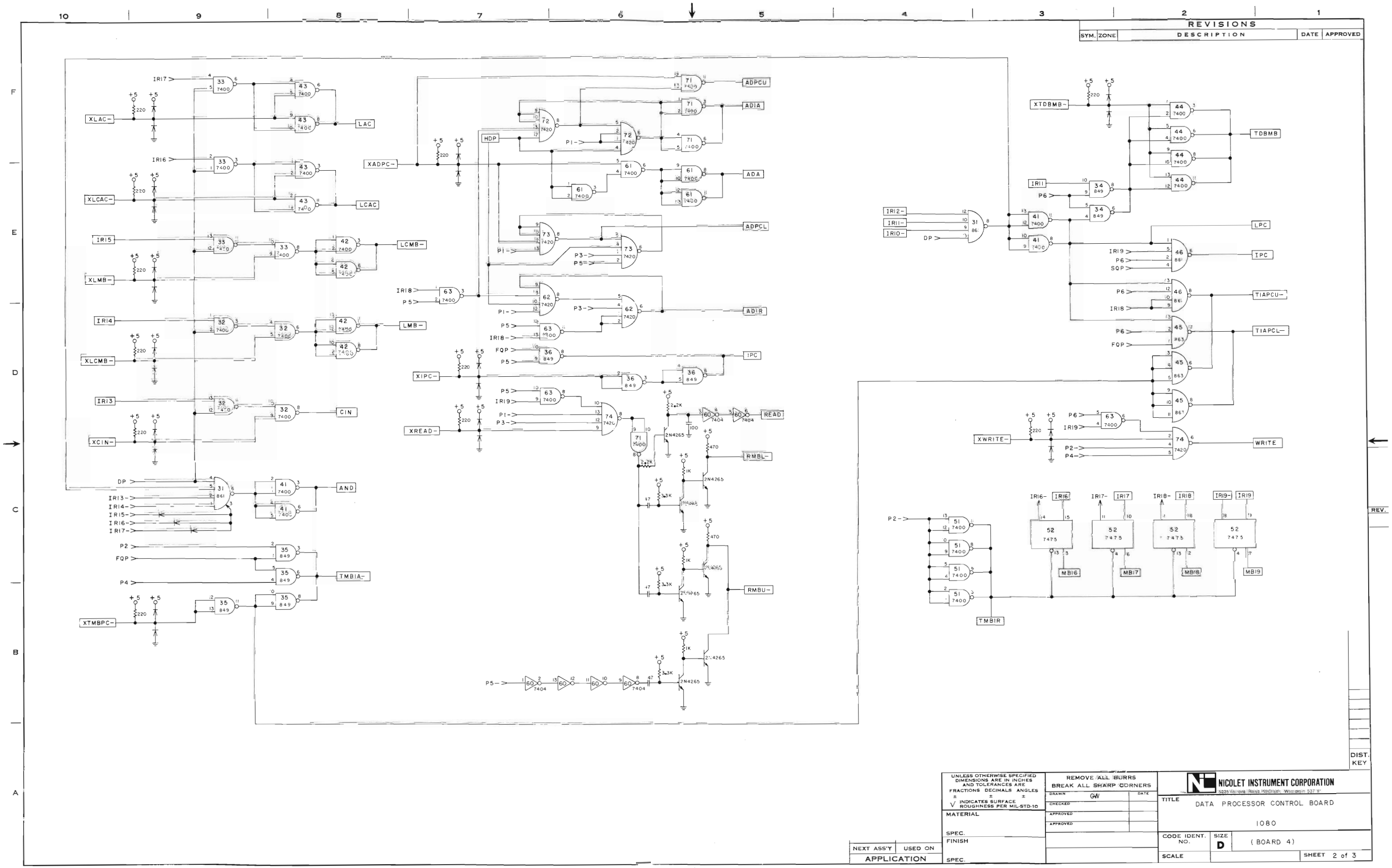
REVISIONS
SYM. ZONE DESCRIPTION DATE APPROVED
XLAC-
LAC
XLCAC-
LCAC
XLMB-
LCMB-
XLCMB-
LMB-
XCIN-
CIN
DP
IRI3-
IRI4-
IRI5-
IRI6-
IRI7-
AND
P2
FQP
P4
TMBIA-
XTMBPC-
XADPC-
HDP
ADPCU
ADIA
ADA
ADPCL
ADIR
IPC
XIPC-
XREAD-
READ
RMBL-
RMBU-
P5-
XTDBMB-
TDBMB
IRI2-
IRI1-
IRI0-
LPC
TIAPCU-
TIAPCL-
XWRITE-
WRITE
TMBIR
MBI6
MBI7
MBI8
MBI9
REV.
DIST. KEY
UNLESS OTHERWISE SPECIFIED DIMENSIONS ARE IN INCHES AND TOLERANCES ARE FRACTIONS DECIMALS ANGLES
INDICATES SURFACE ROUGHNESS PER MIL-STD-10
REMOVE ALL BURRS
BREAK ALL SHARP CORNERS
DRAWN GW DATE
CHECKED
APPROVED
APPROVED
MATERIAL
SPEC.
FINISH
SPEC.
NEXT ASS'Y USED ON
APPLICATION
NICOLET INSTRUMENT CORPORATION
5225 Verona Road Madison, Wisconsin 53711
TITLE
DATA PROCESSOR CONTROL BOARD
1080
CODE IDENT. NO.
SIZE D
(BOARD 4)
SCALE
SHEET 2 of 3

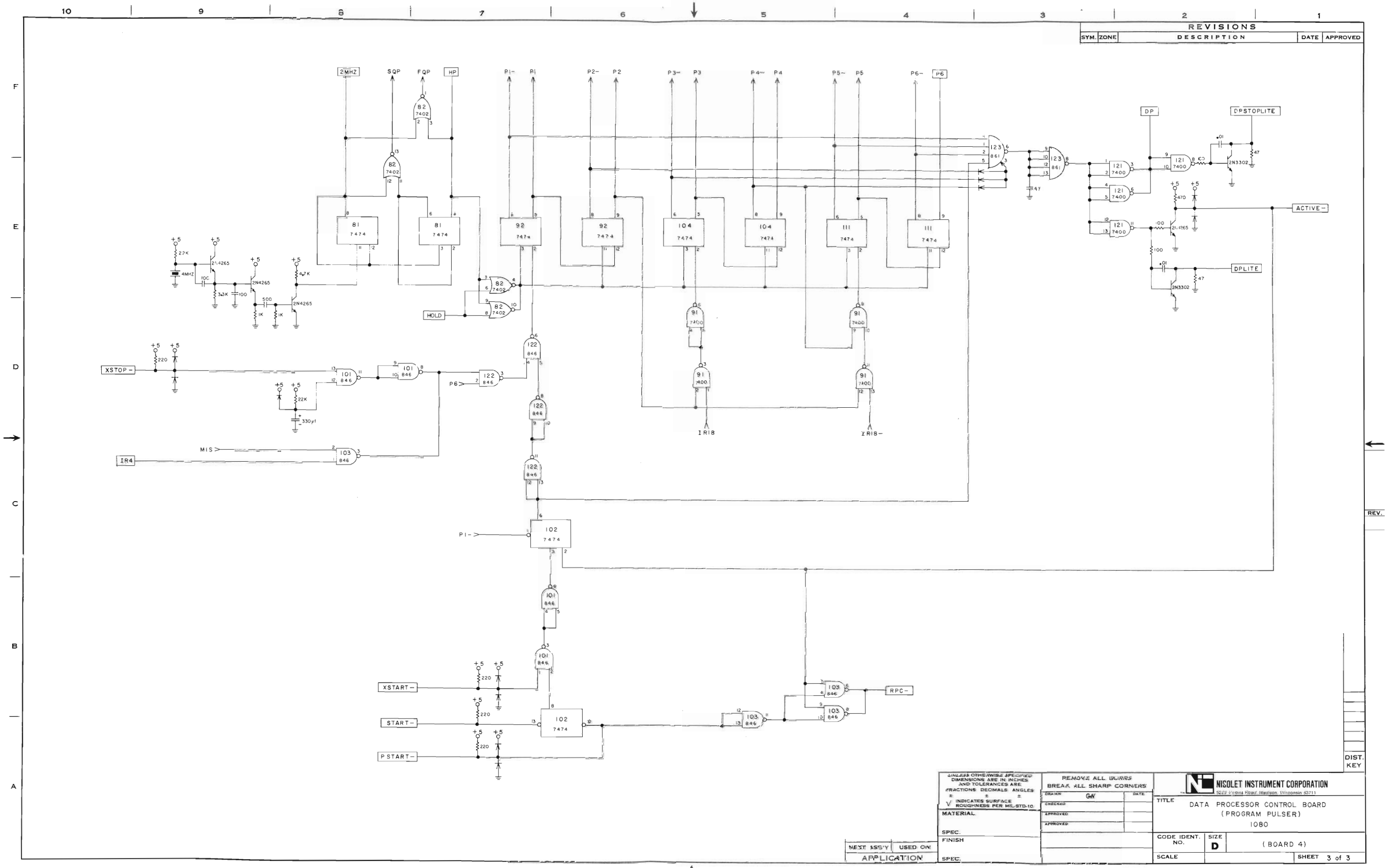
REVISIONS
SYM. ZONE DESCRIPTION DATE APPROVED
2MHZ
SQP
FQP
HP
P1-
P1
P2-
P2
P3-
P3
P4-
P4
P5-
P5
P6-
P6
DP
DPSTOPLITE
ACTIVE-
DPLITE
HOLD
XSTOP-
MIS>
IR4
P6>
IR18
IR18-
P1->
XSTART-
START-
PSTART-
RPC-
DIST. KEY
REV.
NEXT ASS'Y
USED ON
APPLICATION
UNLESS OTHERWISE SPECIFIED DIMENSIONS ARE IN INCHES AND TOLERANCES ARE FRACTIONS ± DECIMALS ± ANGLES ±
INDICATES SURFACE ROUGHNESS PER MIL-STD-10.
MATERIAL
SPEC.
FINISH
SPEC.
REMOVE ALL BURRS
BREAK ALL SHARP CORNERS
DRAWN GW DATE
CHECKED
APPROVED
APPROVED
NISOLET INSTRUMENT CORPORATION
5227 Verona Road, Madison, Wisconsin 53711
TITLE
DATA PROCESSOR CONTROL BOARD
(PROGRAM PULSER)
1080
CODE IDENT. NO.
SIZE D
(BOARD 4)
SCALE
SHEET 3 of 3

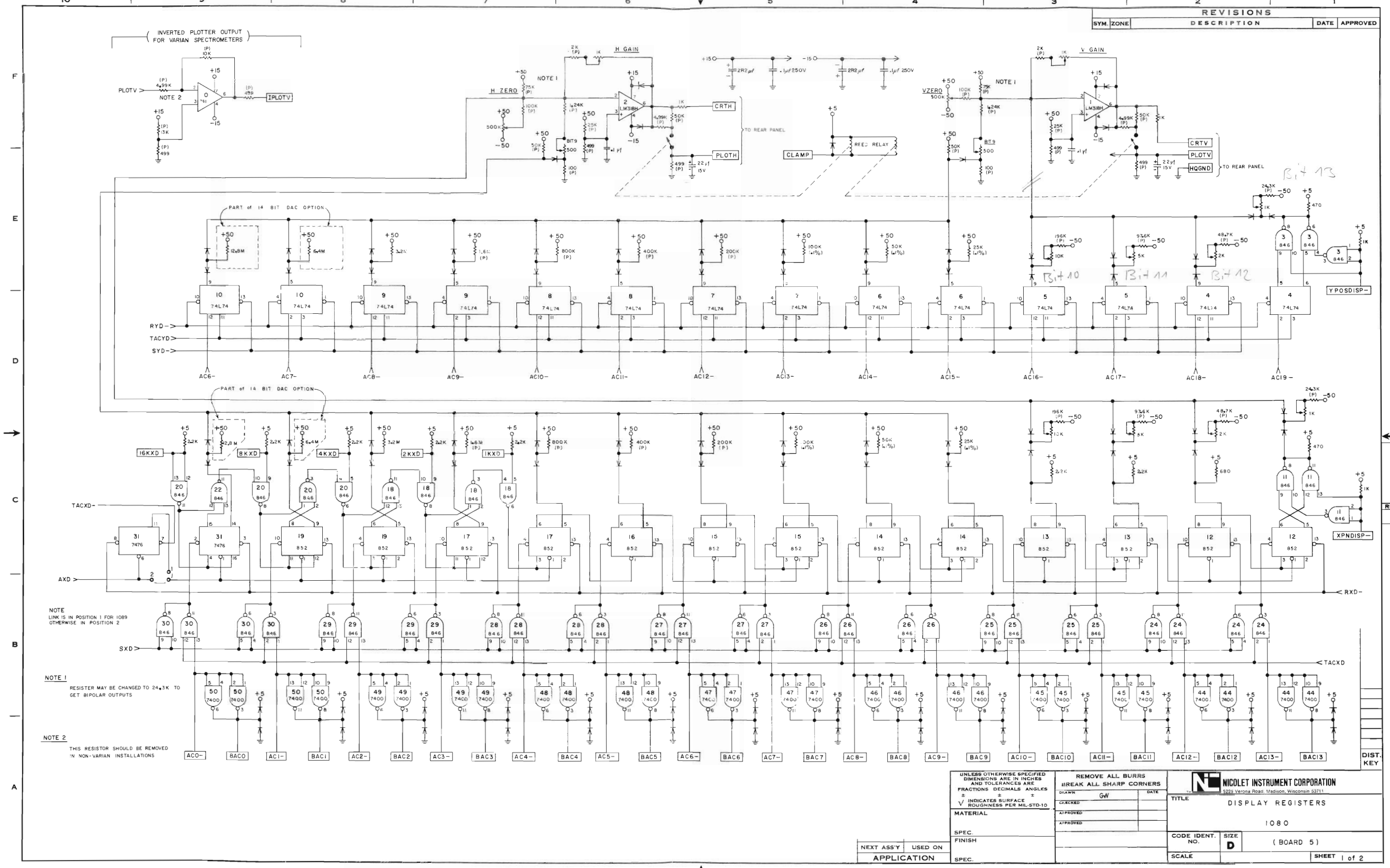
REVISIONS
SYM. ZONE DESCRIPTION DATE APPROVED
INVERTED PLOTTER OUTPUT FOR VARIAN SPECTROMETERS
PLOTV
IPLOTV
NOTE 2
H ZERO
NOTE 1
H GAIN
CRTH
PLOTH
TO REAR PANEL
CLAMP
REED RELAY
VZERO
V GAIN
CRTV
PLOTV
HQGND
Bit 13
Bit 10
Bit 11
Bit 12
YPOSDISP-
XPNDISP-
PART of 14 BIT DAC OPTION
RYD-
TACYD-
SYD-
AC6- AC7- AC8- AC9- AC10- AC11- AC12- AC13- AC14- AC15- AC16- AC17- AC18- AC19-
16KXD 8KXD 4KXD 2KXD 1KXD
TACXD-
AXD
RXD-
SXD
TACXD
NOTE
LINK IS IN POSITION 1 FOR 1089 OTHERWISE IN POSITION 2
NOTE 1
RESISTER MAY BE CHANGED TO 24.3K TO GET BIPOLAR OUTPUTS
NOTE 2
THIS RESISTOR SHOULD BE REMOVED IN NON-VARIAN INSTALLATIONS
AC0- BAC0 AC1- BAC1 AC2- BAC2 AC3- BAC3 AC4- BAC4 AC5- BAC5 AC6- BAC6 AC7- BAC7 AC8- BAC8 AC9- BAC9 AC10- BAC10 AC11- BAC11 AC12- BAC12 AC13- BAC13
DIST. KEY
REV.
UNLESS OTHERWISE SPECIFIED DIMENSIONS ARE IN INCHES AND TOLERANCES ARE FRACTIONS DECIMALS ANGLES
INDICATES SURFACE ROUGHNESS PER MIL-STD-10
MATERIAL
SPEC.
FINISH
SPEC.
NEXT ASS'Y USED ON
APPLICATION
REMOVE ALL BURRS
BREAK ALL SHARP CORNERS
DRAWN GW DATE
CHECKED
APPROVED
APPROVED
NICOLET INSTRUMENT CORPORATION
5225 Verona Road, Madison, Wisconsin 53711
TITLE
DISPLAY REGISTERS
1080
CODE IDENT. NO.
SIZE D
(BOARD 5)
SCALE
SHEET 1 of 2

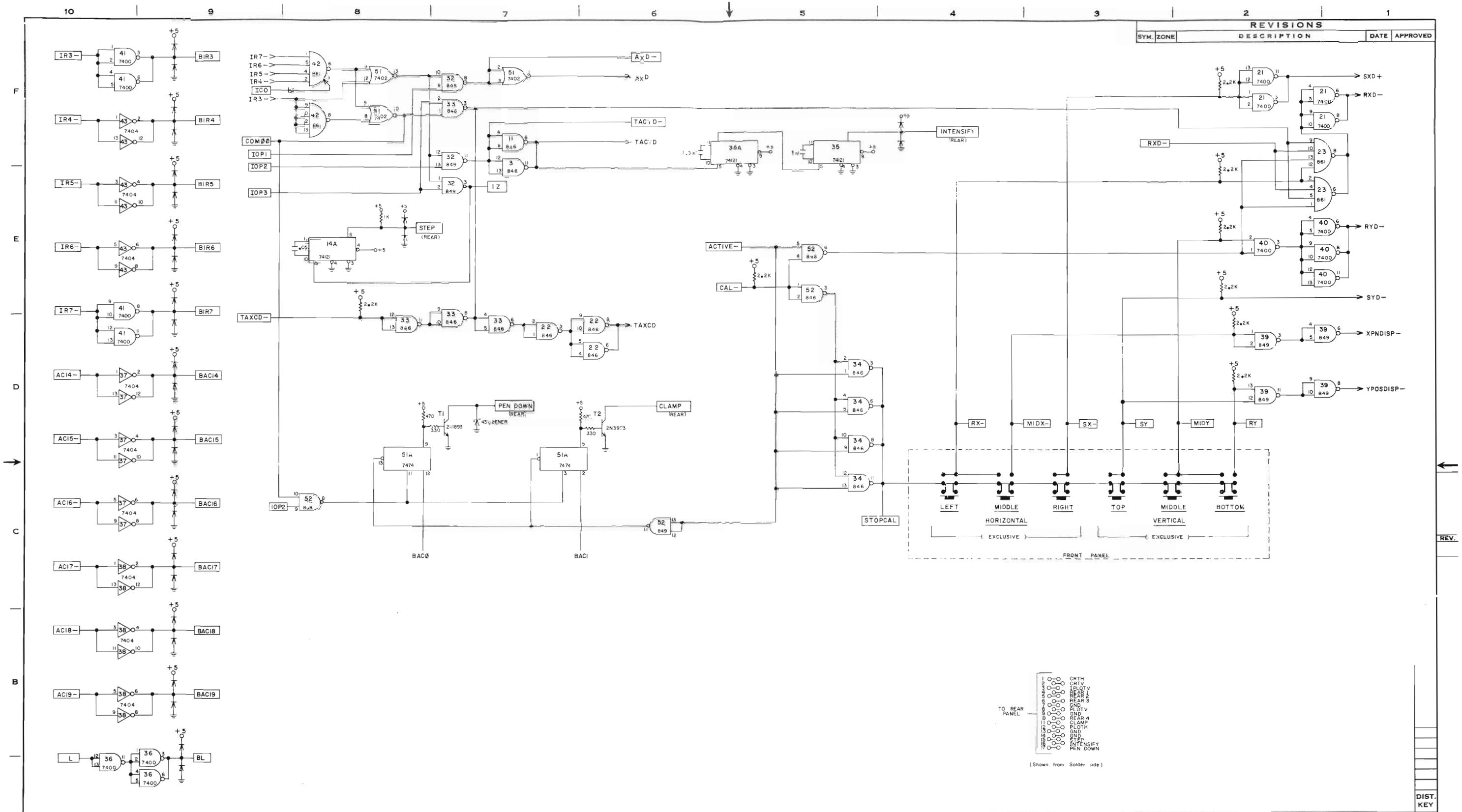
REVISIONS
SYM. ZONE DESCRIPTION DATE APPROVED
IR3– IR4– IR5– IR6– IR7– ACI4– ACI5– ACI6– ACI7– ACI8– ACI9– L
BIR3 BIR4 BIR5 BIR6 BIR7 BACI4 BACI5 BACI6 BACI7 BACI8 BACI9 BL
IR7– IR6– IR5– IR4– ICO IR3–
COMØØ IOP1 IOP2 IOP3
AXD– AXD
TACD– TACD
INTENSIFY (REAR)
STEP (REAR)
TAXCD– TAXCD
PEN DOWN (REAR)
CLAMP (REAR)
BACØ BACI
ACTIVE– CAL–
STOPCAL
SXD+ RXD– RYD– SYD– XPNDISP– YPOSDISP–
RX– MIDX– SX– SY MIDY RY
LEFT MIDDLE RIGHT TOP MIDDLE BOTTOM
HORIZONTAL VERTICAL
EXCLUSIVE EXCLUSIVE
FRONT PANEL
TO REAR PANEL
CRTH CRTV 1BLOTV REAR 1 REAR 2 REAR 3 GND PLOTV GND REAR 4 CLAMP PLOTH GND GND STEP INTENSIFY PEN DOWN
(Shown from Solder side)
DIST. KEY
REV.
UNLESS OTHERWISE SPECIFIED DIMENSIONS ARE IN INCHES AND TOLERANCES ARE FRACTIONS DECIMALS ANGLES
INDICATES SURFACE ROUGHNESS PER MIL-STD-10
MATERIAL
SPEC.
FINISH
SPEC.
NEXT ASS'Y USED ON
APPLICATION
REMOVE ALL BURRS
BREAK ALL SHARP CORNERS
DRAWN GW DATE
CHECKED
APPROVED
APPROVED
NICOLET INSTRUMENT CORPORATION
5225 Verona Road, Madison, Wisconsin 53711
TITLE
DISPLAY REGISTER CONTROL BOARD
1080
CODE IDENT. NO.
SIZE D
(BOARD 5)
SCALE
SHEET 2 of 2

2/28/73

REVISIONS				
SYM.	ZONE	DESCRIPTION	DATE	APPROVED

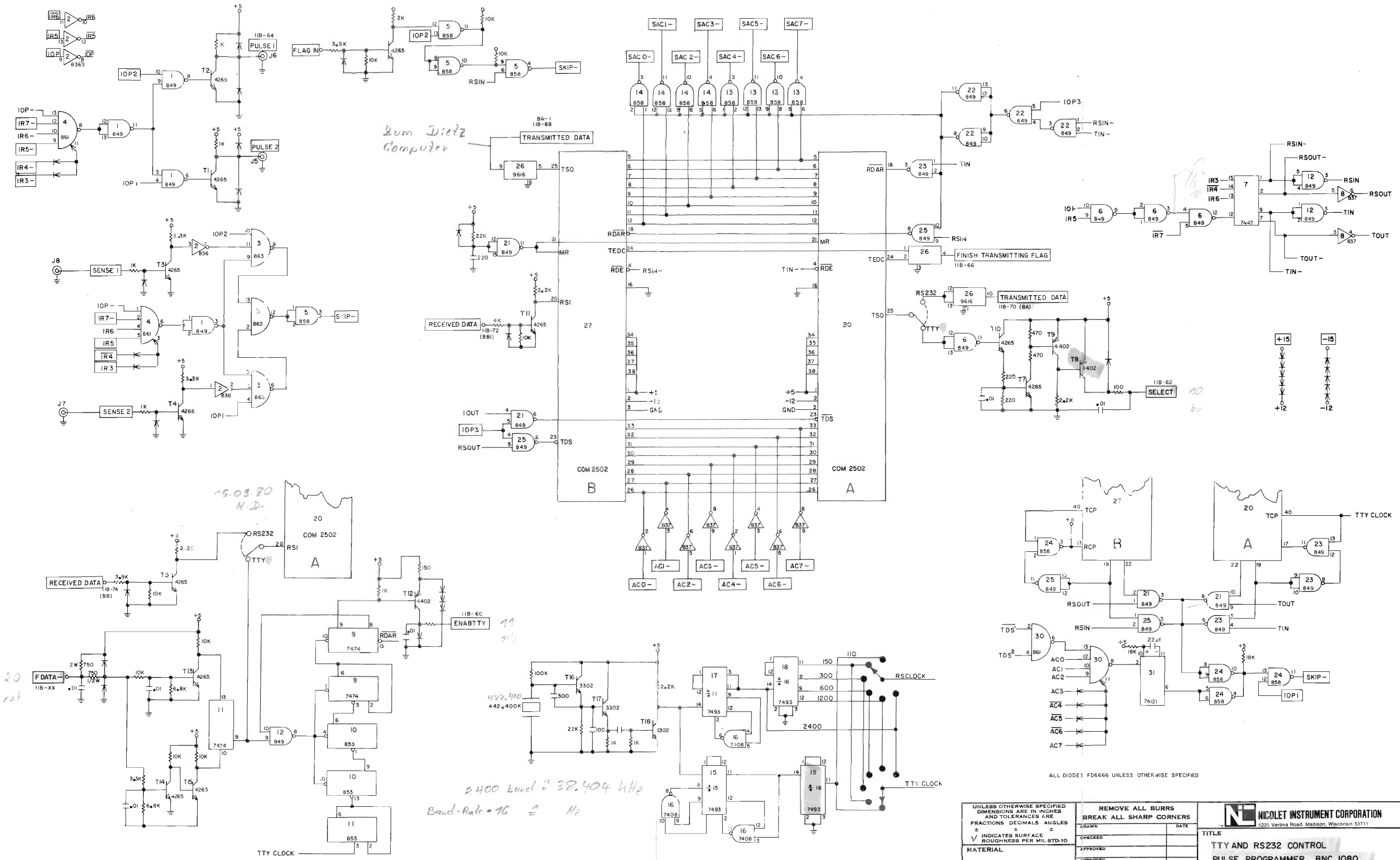

16.03.80 H.D.

20 rot

11 gelb

2400 baud ≙ 38.404 kHz

Baud-Rate • 16 ≙ Hz

UNLESS OTHERWISE SPECIFIED DIMENSIONS ARE IN INCHES AND TOLERANCES ARE FRACTIONS DECIMALS ANGLES ± ± ± √ INDICATES SURFACE ROUGHNESS PER MIL-STD-10	REMOVE ALL BURRS BREAK ALL SHARP CORNERS	NICOLET INSTRUMENT CORPORATION 5225 Verona Road, Madison, Wisconsin 53711
MATERIAL	DRAWN / DATE	TITLE TTY AND RS232 CONTROL PULSE PROGRAMMER BNC 1080
SPEC.	CHECKED	3/6/73
FINISH	APPROVED	CODE IDENT. NO. / SIZE D / DWG. NO. (BOARD 11)
SPEC.	APPROVED	SCALE / SHEET
NEXT ASS'Y / USED ON: APPLICATION		

DIST. KEY

REV.

Grün leicht Spannung 6 V D-49 21 1/4

orange (-15 V)

1 braun
2 rot
3 orange
4 gelb
5 grün

Nicolet

TTY

Weitere Angaben siehe Reparatur- bzw Modifikationsbericht.

REVISIONS				
SYM.	ZONE	DESCRIPTION	DATE	APPROVED

TOTAL OF 20 IDENTICAL STAGES, 1 SHOWN

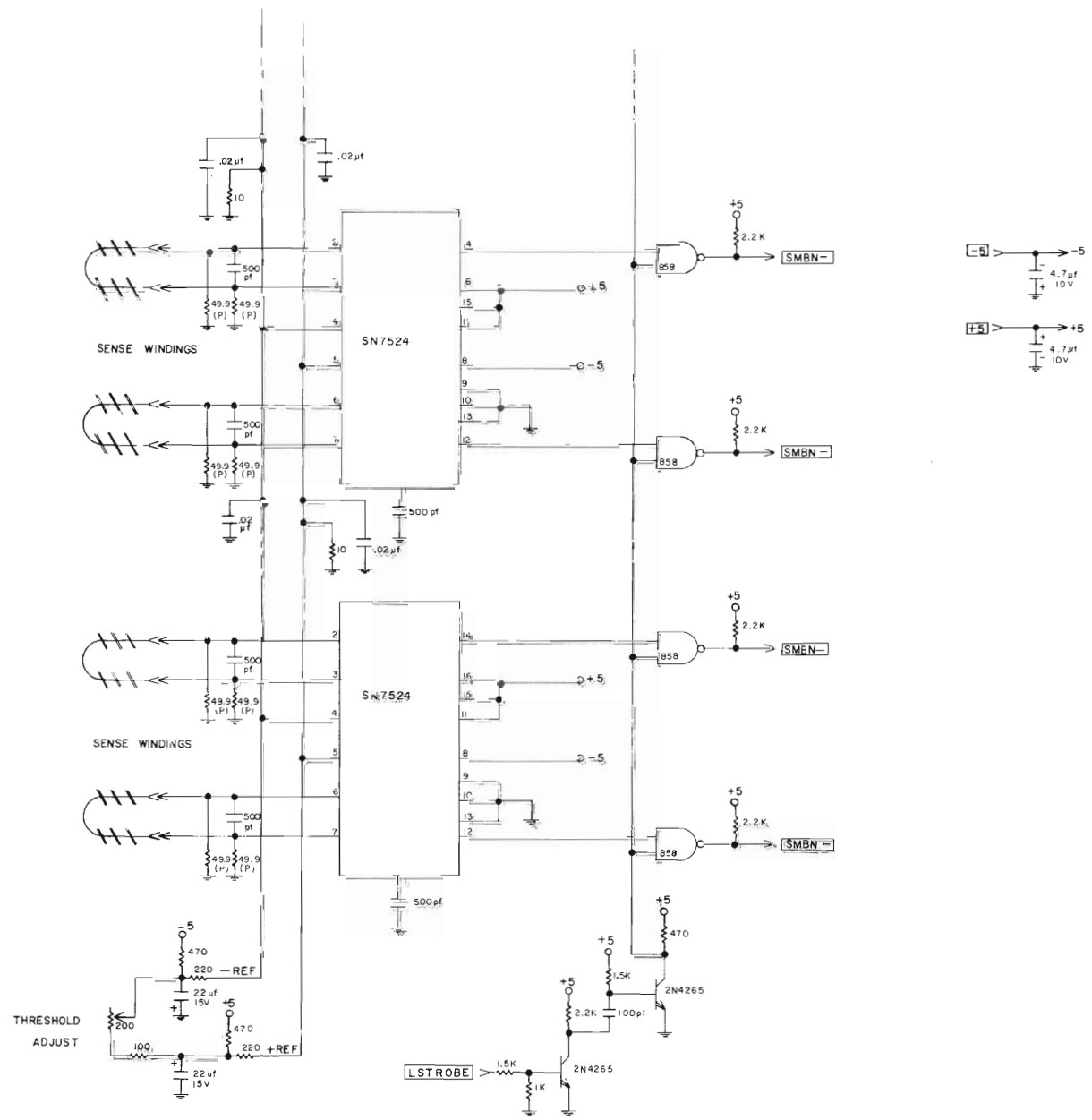

NEXT ASS'Y	USED ON
APPLICATION	

UNLESS OTHERWISE SPECIFIED DIMENSIONS ARE IN INCHES AND TOLERANCES ARE FRACTIONS ± DECIMALS ± ANGLES ±
√ INDICATES SURFACE ROUGHNESS PER MIL-STD-10
MATERIAL
SPEC.
FINISH
SPEC.

REMOVE ALL BURRS
BREAK ALL SHARP CORNERS
DRAWN MC DATE 6-27-70
CHECKED
APPROVED
APPROVED

NICOLET INSTRUMENT CORPORATION
(5225 Verona Road, Madison, Wisconsin 53711)

TITLE SENSE AMPLIFIER 1080

CODE IDENT. NO. | SIZE D | MEMORY BOARD 1

SCALE | SHEET 1 of 1

DIST. KEY

REV.

Rev. A 6/15/71

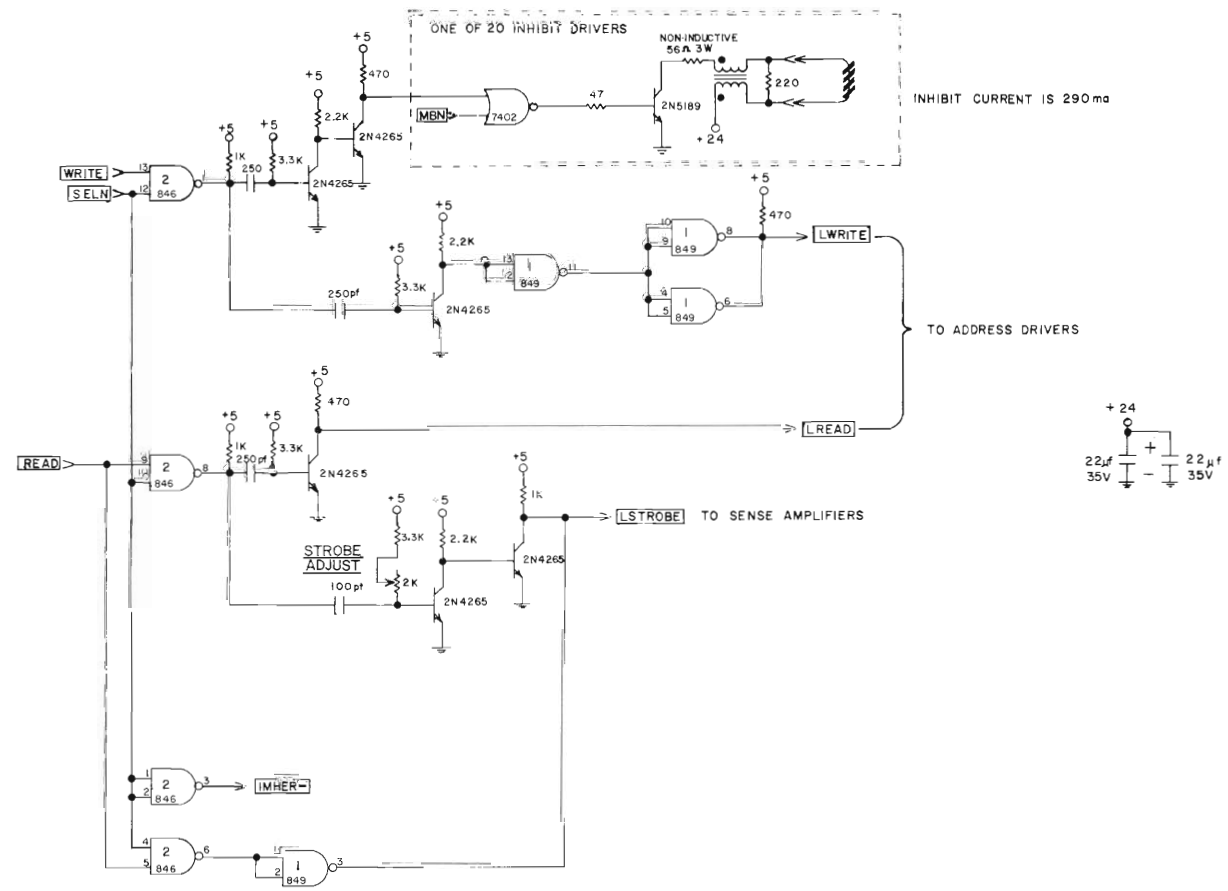

REVISIONS				
SYM.	ZONE	DESCRIPTION	DATE	APPROVED

UNLESS OTHERWISE SPECIFIED DIMENSIONS ARE IN INCHES AND TOLERANCES ARE
FRACTIONS ± DECIMALS ± ANGLES ±
√ INDICATES SURFACE ROUGHNESS PER MIL-STD-10
MATERIAL
SPEC.
FINISH
SPEC.

REMOVE ALL BURRS
BREAK ALL SHARP CORNERS

DRAWN MC DATE 6-23-70
CHECKED
APPROVED
APPROVED

NICOLET INSTRUMENT CORPORATION
Hartfordshire Plant, Madison, Wisconsin 53713

TITLE
INHIBIT DRIVER 1080 MEMORY

CODE IDENT. NO. | SIZE D | MEMORY BOARD 2
SCALE | SHEET 1 of 1

NEXT ASS'Y | USED ON
APPLICATION

DIST. KEY

REV.

REVISIONS				
SYM.	ZONE	DESCRIPTION	DATE	APPROVED

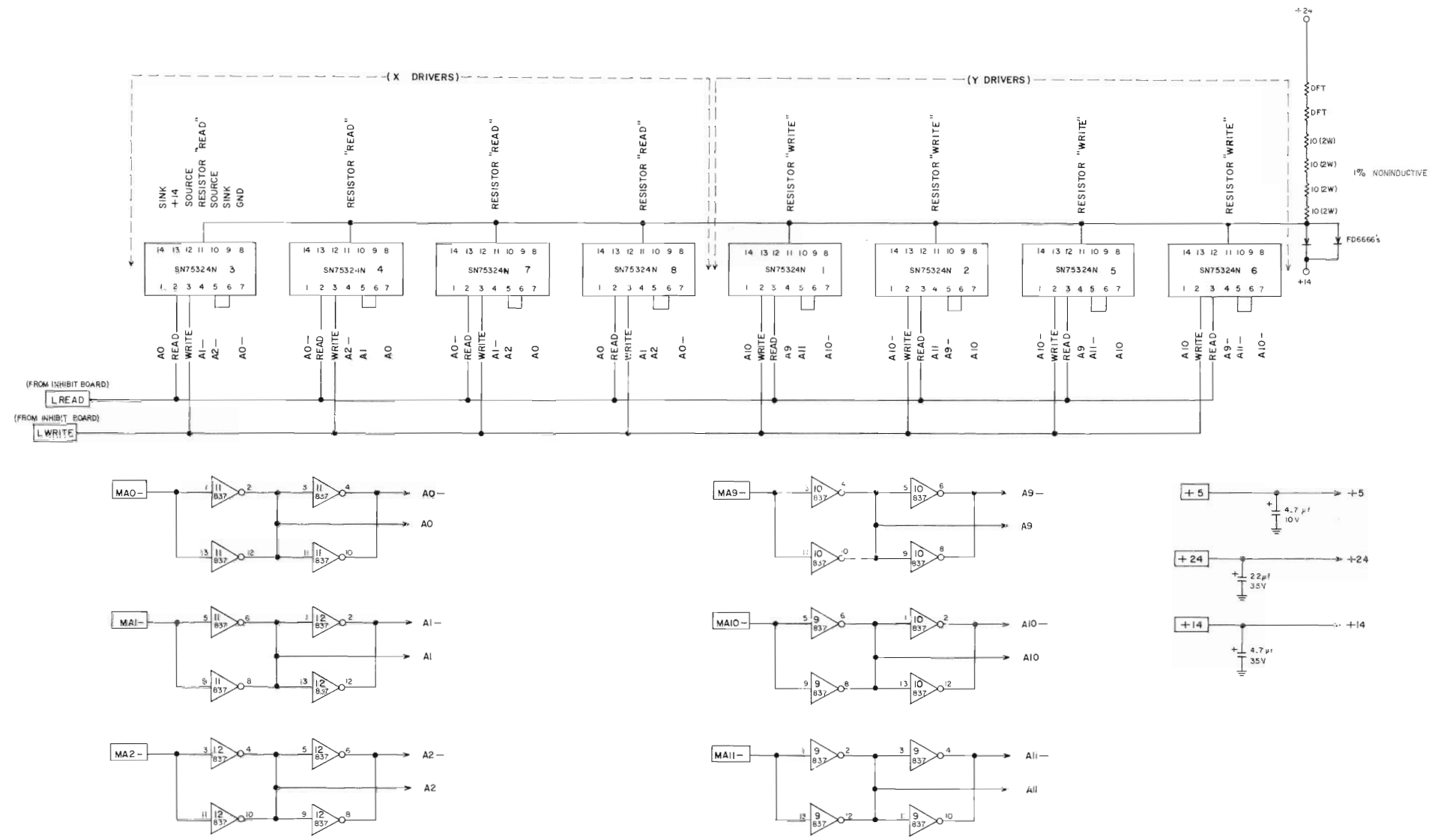

NEXT ASS'Y	USED ON
APPLICATION	

UNLESS OTHERWISE SPECIFIED DIMENSIONS ARE IN INCHES AND TOLERANCES ARE FRACTIONS ± DECIMALS ± ANGLES ±
√ INDICATES SURFACE ROUGHNESS PER MIL-STD-10

MATERIAL
SPEC.
FINISH
SPEC.

REMOVE ALL BURRS
BREAK ALL SHARP CORNERS

DRAWN	DATE
CHECKED	
APPROVED	
APPROVED	

NICOLET INSTRUMENT CORPORATION
5225 Verona Road, Madison, Wisconsin 53711

TITLE
ADDRESS DRIVER FOR MODEL 1080

CODE IDENT. NO.	SIZE	
	D	MEMORY BOARD 3
SCALE		SHEET 2 of 2

REV.

DIST. KEY

Rev. A 6/15/71

REVISIONS				
SYM.	ZONE	DESCRIPTION	DATE	APPROVED

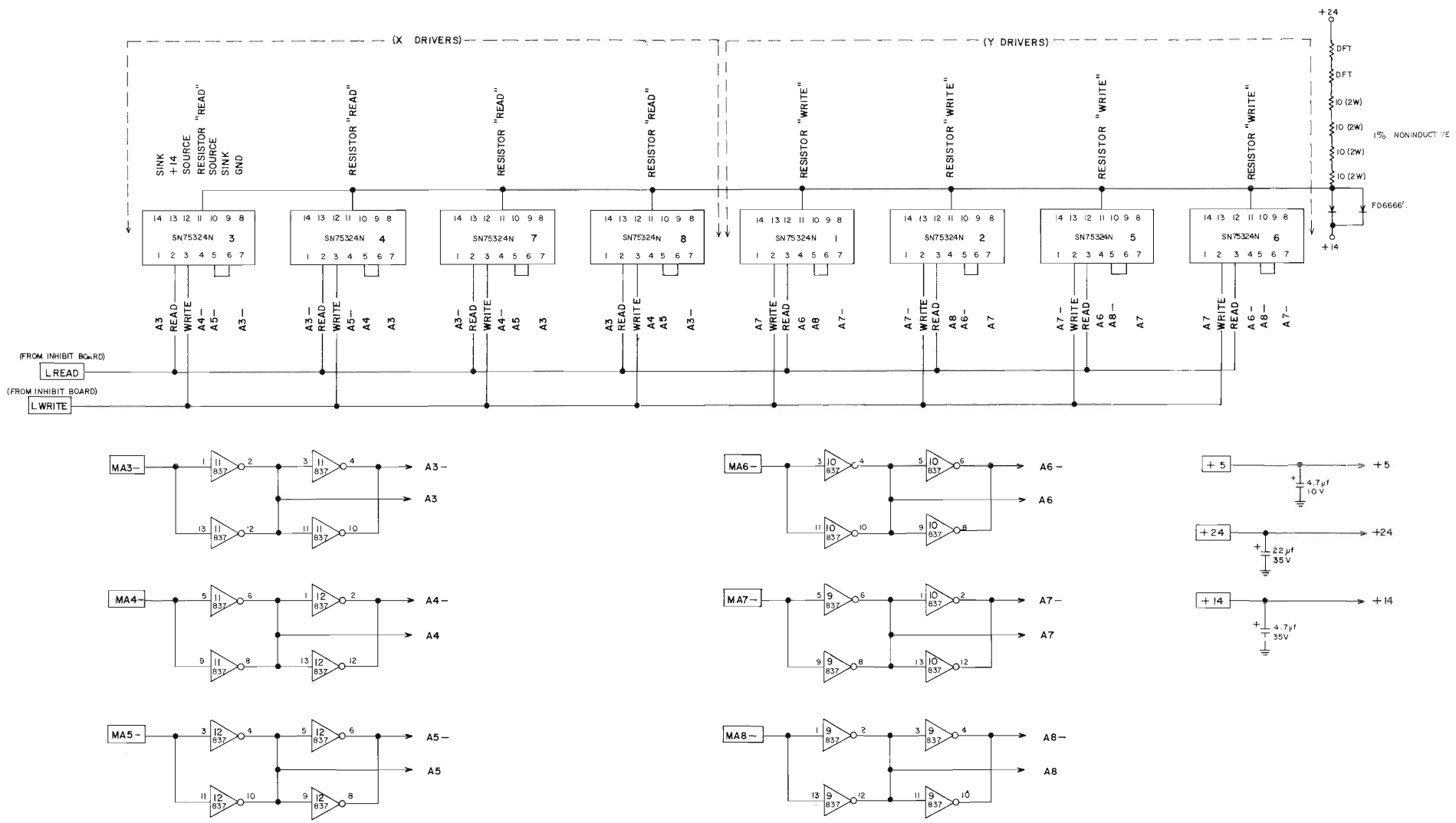

REV.

DIST. KEY

UNLESS OTHERWISE SPECIFIED DIMENSIONS ARE IN INCHES AND TOLERANCES ARE FRACTIONS ± DECIMALS ± ANGLES ±	REMOVE ALL BURRS BREAK ALL SHARP CORNERS	NICOLET INSTRUMENT CORPORATION 5225 Verona Road, Madison, Wisconsin 53711
√ INDICATES SURFACE ROUGHNESS PER MIL-STD-10	DRAWN / DATE	TITLE ADDRESS DRIVER FOR MODEL 1080
MATERIAL	CHECKED	
SPEC.	APPROVED	
FINISH	APPROVED	CODE IDENT. NO. / SIZE D / MEMORY BOARD 6
SPEC.		SCALE / SHEET 1 of 2

NEXT ASS'Y	USED ON
APPLICATION	

Rev. A 6/15/71

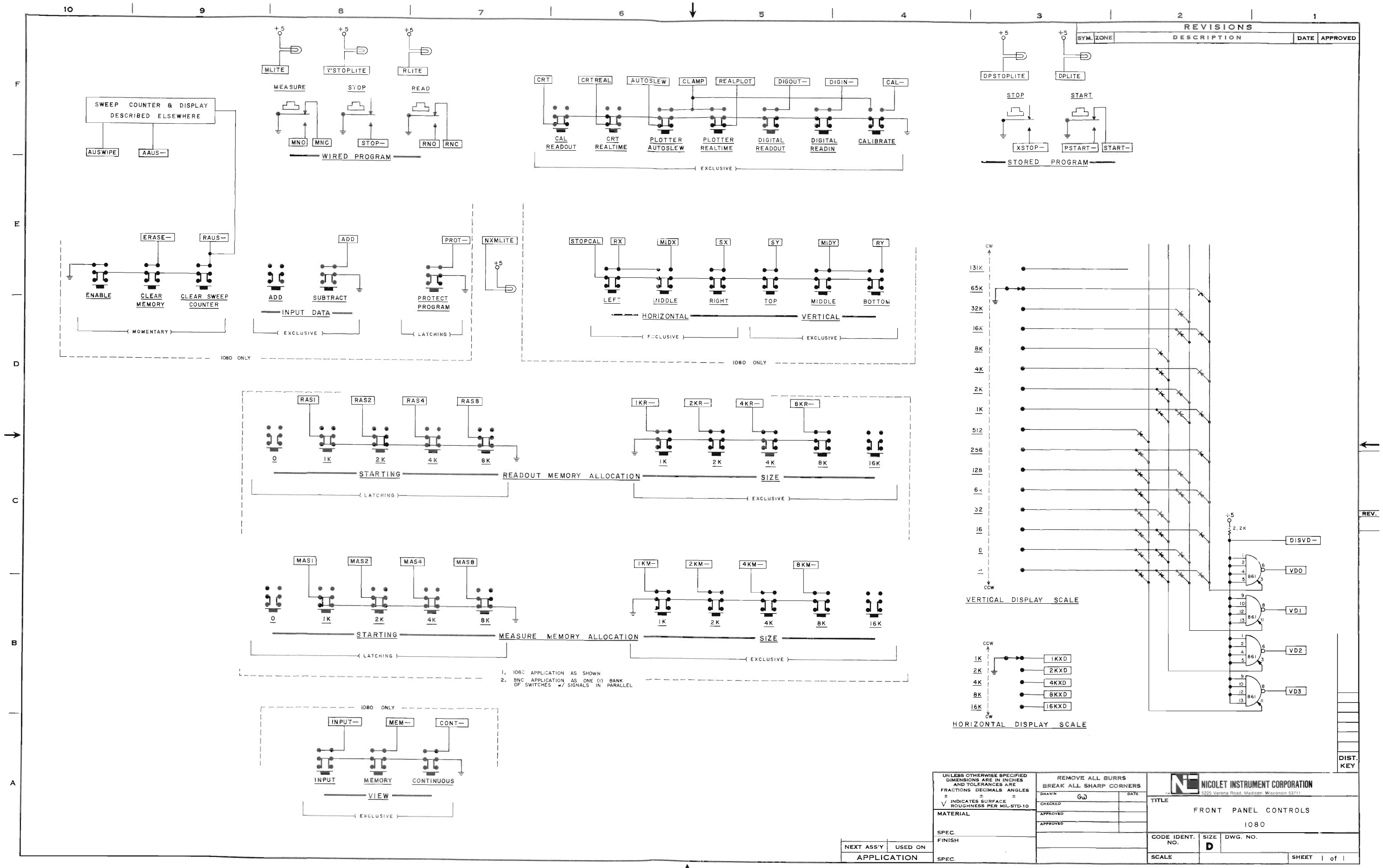
REVISIONS
SYM. ZONE DESCRIPTION DATE APPROVED
MLITE
WSTOPLITE
RLITE
MEASURE
STOP
READ
MNO
MNC
STOP—
RNO
RNC
WIRED PROGRAM
SWEEP COUNTER & DISPLAY DESCRIBED ELSEWHERE
AUSWIPE
AAUS—
CRT
CRTREAL
AUTOSLEW
CLAMP
REALPLOT
DIGOUT—
DIGIN—
CAL—
CAL READOUT
CRT REALTIME
PLOTTER AUTOSLEW
PLOTTER REALTIME
DIGITAL READOUT
DIGITAL READIN
CALIBRATE
EXCLUSIVE
DPSTOPLITE
DPLITE
STOP
START
XSTOP—
PSTART—
START—
STORED PROGRAM
ERASE—
RAUS—
ENABLE
CLEAR MEMORY
CLEAR SWEEP COUNTER
MOMENTARY
ADD
SUBTRACT
INPUT DATA
EXCLUSIVE
PROT—
PROTECT PROGRAM
LATCHING
1080 ONLY
NXMLITE
STOPCAL
RX
MIDX
SX
SY
MIDY
RY
LEFT
MIDDLE
RIGHT
TOP
MIDDLE
BOTTOM
HORIZONTAL
VERTICAL
EXCLUSIVE
EXCLUSIVE
1080 ONLY
RAS1
RAS2
RAS4
RAS8
0
1K
2K
4K
8K
STARTING
READOUT MEMORY ALLOCATION
SIZE
LATCHING
EXCLUSIVE
1KR—
2KR—
4KR—
8KR—
1K
2K
4K
8K
16K
MAS1
MAS2
MAS4
MAS8
0
1K
2K
4K
8K
STARTING
MEASURE MEMORY ALLOCATION
SIZE
LATCHING
EXCLUSIVE
1KM—
2KM—
4KM—
8KM—
1K
2K
4K
8K
16K
1. 1080 APPLICATION AS SHOWN
2. BNC APPLICATION AS ONE (1) BANK OF SWITCHES w/ SIGNALS IN PARALLEL
1080 ONLY
INPUT—
MEM—
CONT—
INPUT
MEMORY
CONTINUOUS
VIEW
EXCLUSIVE
CW
131K
65K
32K
16K
8K
4K
2K
1K
512
256
128
64
32
16
8
4
CCW
VERTICAL DISPLAY SCALE
CCW
1K
2K
4K
8K
16K
CW
1KXD
2KXD
4KXD
8KXD
16KXD
HORIZONTAL DISPLAY SCALE
+5
2.2K
DISVD—
VD0
VD1
VD2
VD3
861
REV.
DIST. KEY
NEXT ASS'Y
USED ON
APPLICATION
UNLESS OTHERWISE SPECIFIED DIMENSIONS ARE IN INCHES AND TOLERANCES ARE
FRACTIONS ± DECIMALS ± ANGLES ±
√ INDICATES SURFACE ROUGHNESS PER MIL-STD-10
MATERIAL
SPEC.
FINISH
SPEC.
REMOVE ALL BURRS
BREAK ALL SHARP CORNERS
DRAWN
DATE
CHECKED
APPROVED
APPROVED
NICOLET INSTRUMENT CORPORATION
5225 Verona Road, Madison, Wisconsin 53711
TITLE
FRONT PANEL CONTROLS
1080
CODE IDENT. NO.
SIZE D
DWG. NO.
SCALE
SHEET 1 of 1

REVISIONS				
SYM.	ZONE	DESCRIPTION	DATE	APPROVED

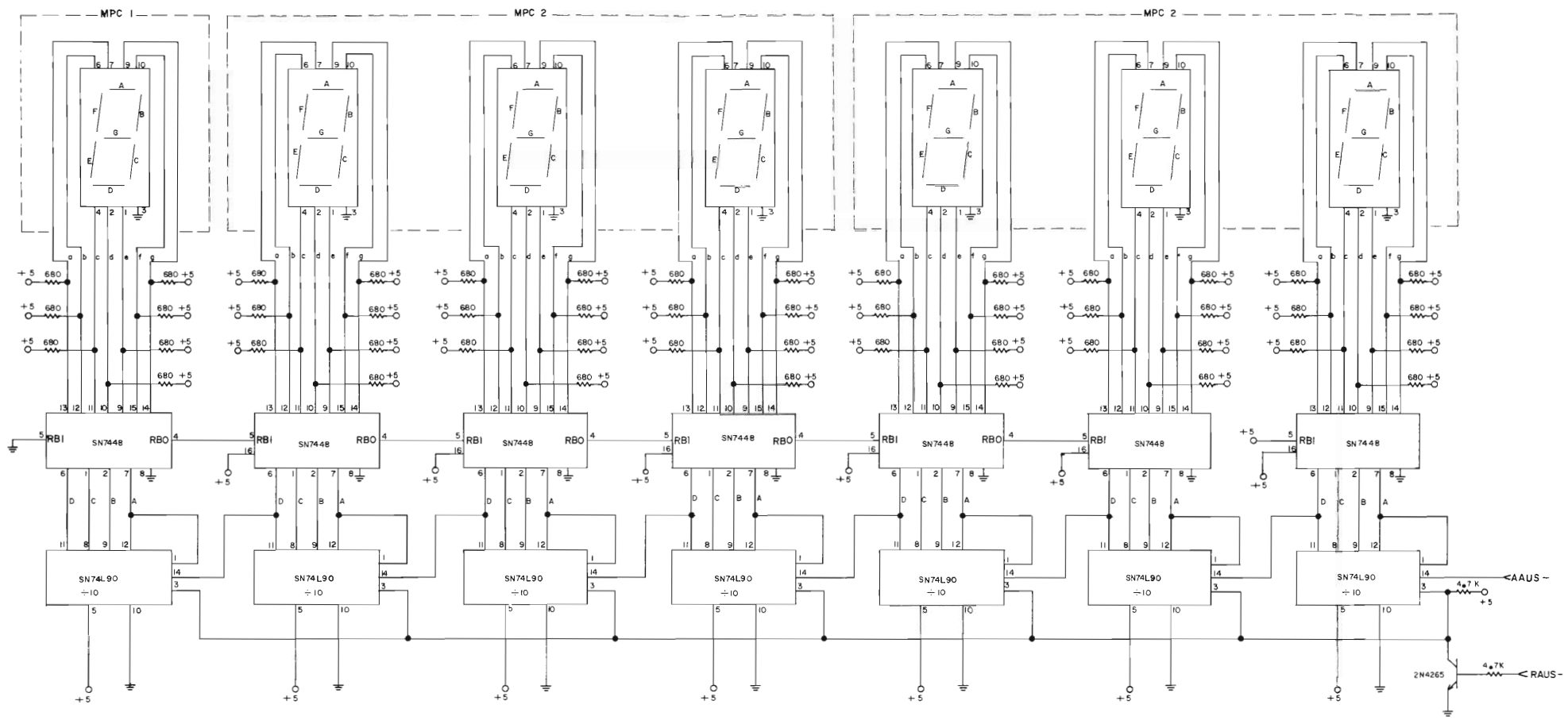

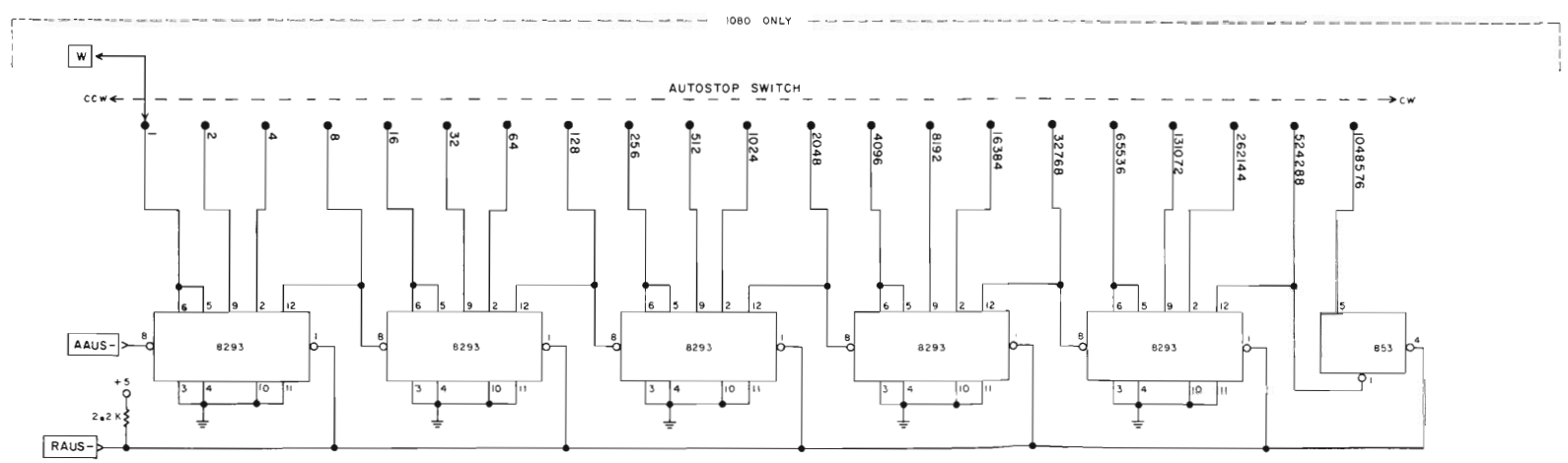

UNLESS OTHERWISE SPECIFIED DIMENSIONS ARE IN INCHES AND TOLERANCES ARE FRACTIONS DECIMALS ANGLES ± ± √ INDICATES SURFACE ROUGHNESS PER MIL-STD-10	REMOVE ALL BURRS BREAK ALL SHARP CORNERS	NICOLET INSTRUMENT CORPORATION 5225 Verona Road, Madison, Wisconsin 53711
MATERIAL	DRAWN / DATE	TITLE LOCATED ON FRONT PANEL OF 1080 SEVEN SEGMENT – SEVEN DIGIT DISPLAY COUNTER & DRIVER & AUTOSTOP SCALER
SPEC.	CHECKED	
FINISH	APPROVED	
SPEC.	APPROVED	CODE IDENT. NO. / SIZE D / DWG. NO.
NEXT ASS'Y / USED ON		SCALE / SHEET
APPLICATION		

REV.

DIST. KEY

REVISIONS				
SYM.	ZONE	DESCRIPTION	DATE	APPROVED

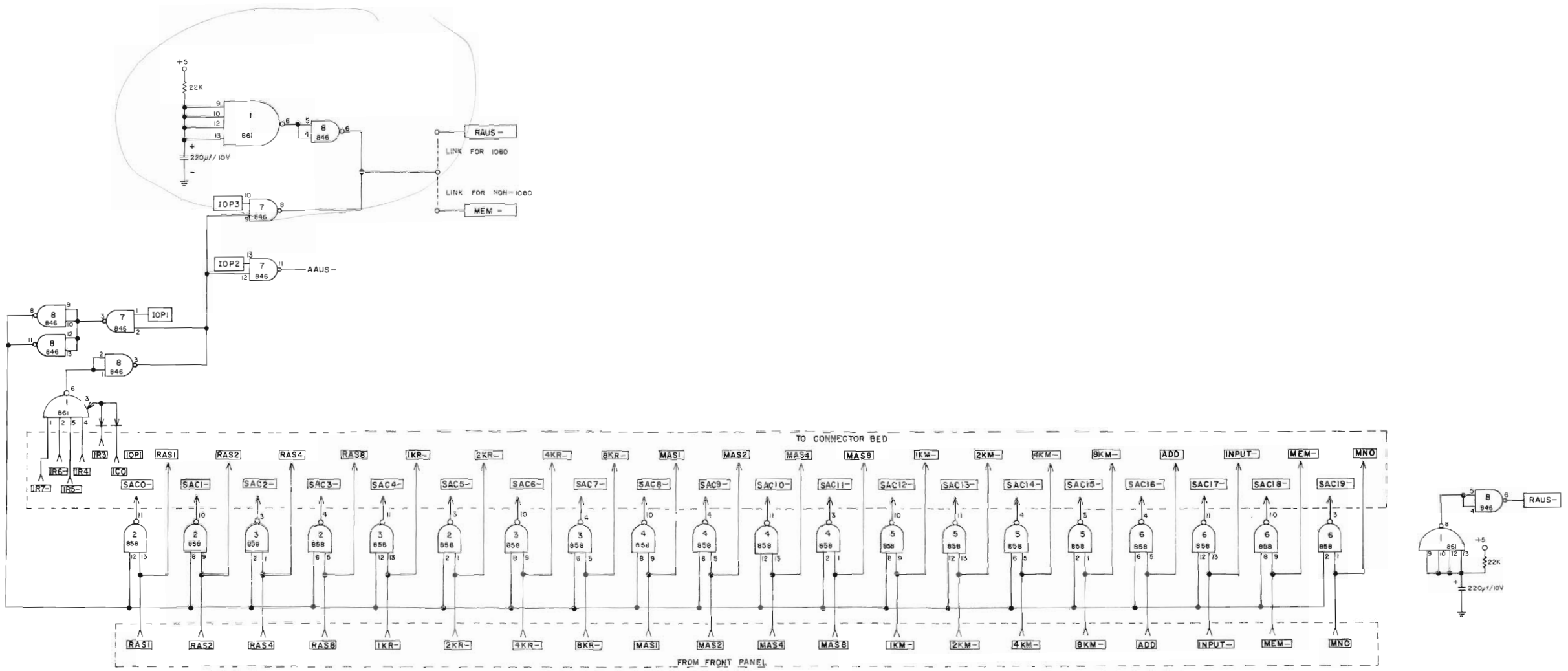

NEXT ASS'Y	USED ON
APPLICATION	

UNLESS OTHERWISE SPECIFIED DIMENSIONS ARE IN INCHES AND TOLERANCES ARE FRACTIONS ± DECIMALS ± ANGLES ±
√ INDICATES SURFACE ROUGHNESS PER MIL-STD-10

MATERIAL
SPEC.
FINISH
SPEC.

REMOVE ALL BURRS
BREAK ALL SHARP CORNERS

		DATE
DRAWN	MG	7-1-70
CHECKED		
APPROVED		
APPROVED		

NICOLET INSTRUMENT CORPORATION
5225 Verona Road, Madison, Wisconsin 53711

TITLE
FRONT PANEL CONNECTOR 1080

CODE IDENT. NO.	SIZE	
	D	(BOARD D2)
SCALE		SHEET 1 of 1

DIST. KEY

REV.

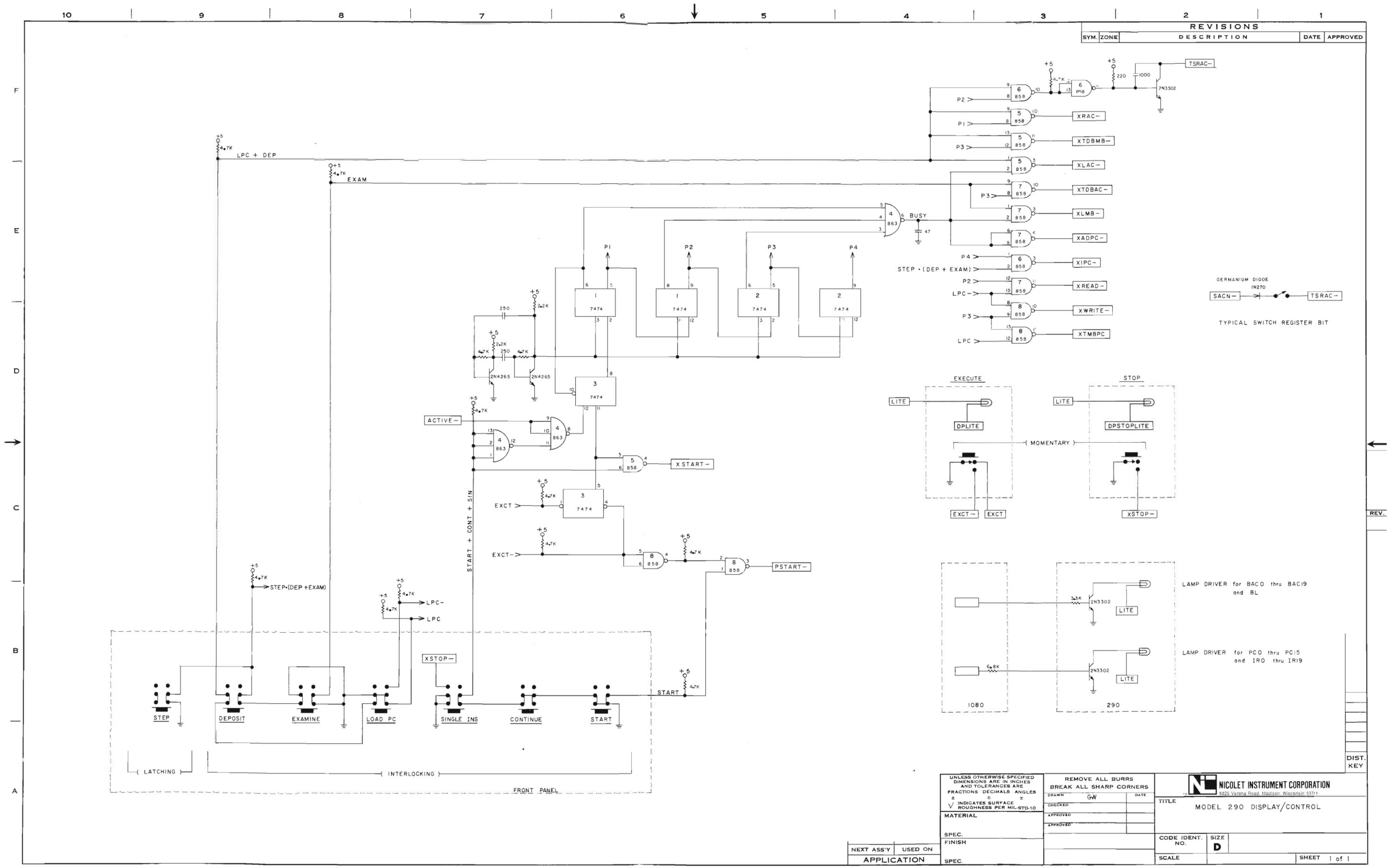
REVISIONS
SYM. ZONE DESCRIPTION DATE APPROVED
LPC + DEP
EXAM
BUSY
STEP • (DEP + EXAM)
LPC-
LPC
ACTIVE-
XSTART-
EXCT
EXCT-
START + CONT + SIN
PSTART-
XSTOP-
START
STEP
DEPOSIT
EXAMINE
LOAD PC
SINGLE INS
CONTINUE
START
LATCHING
INTERLOCKING
FRONT PANEL
TSRAC-
XRAC-
XTDBMB-
XLAC-
XTDBAC-
XLMB-
XADPC-
XIPC-
XREAD-
XWRITE-
XTMBPC
GERMANIUM DIODE
IN270
SACN-
TYPICAL SWITCH REGISTER BIT
EXECUTE
STOP
LITE
DPLITE
DPSTOPLITE
MOMENTARY
EXCT-
EXCT
XSTOP-
LAMP DRIVER for BAC0 thru BAC19 and BL
LAMP DRIVER for PC0 thru PC15 and IR0 thru IR19
1080
290
REV.
DIST. KEY
UNLESS OTHERWISE SPECIFIED DIMENSIONS ARE IN INCHES AND TOLERANCES ARE FRACTIONS DECIMALS ANGLES
INDICATES SURFACE ROUGHNESS PER MIL-STD-10
MATERIAL
SPEC.
FINISH
SPEC.
NEXT ASS'Y USED ON
APPLICATION
REMOVE ALL BURRS
BREAK ALL SHARP CORNERS
DRAWN GW DATE
CHECKED
APPROVED
APPROVED
NICOLET INSTRUMENT CORPORATION
5225 Verona Road, Madison, Wisconsin 53711
TITLE
MODEL 290 DISPLAY/CONTROL
CODE IDENT. NO.
SIZE D
SCALE
SHEET 1 of 1

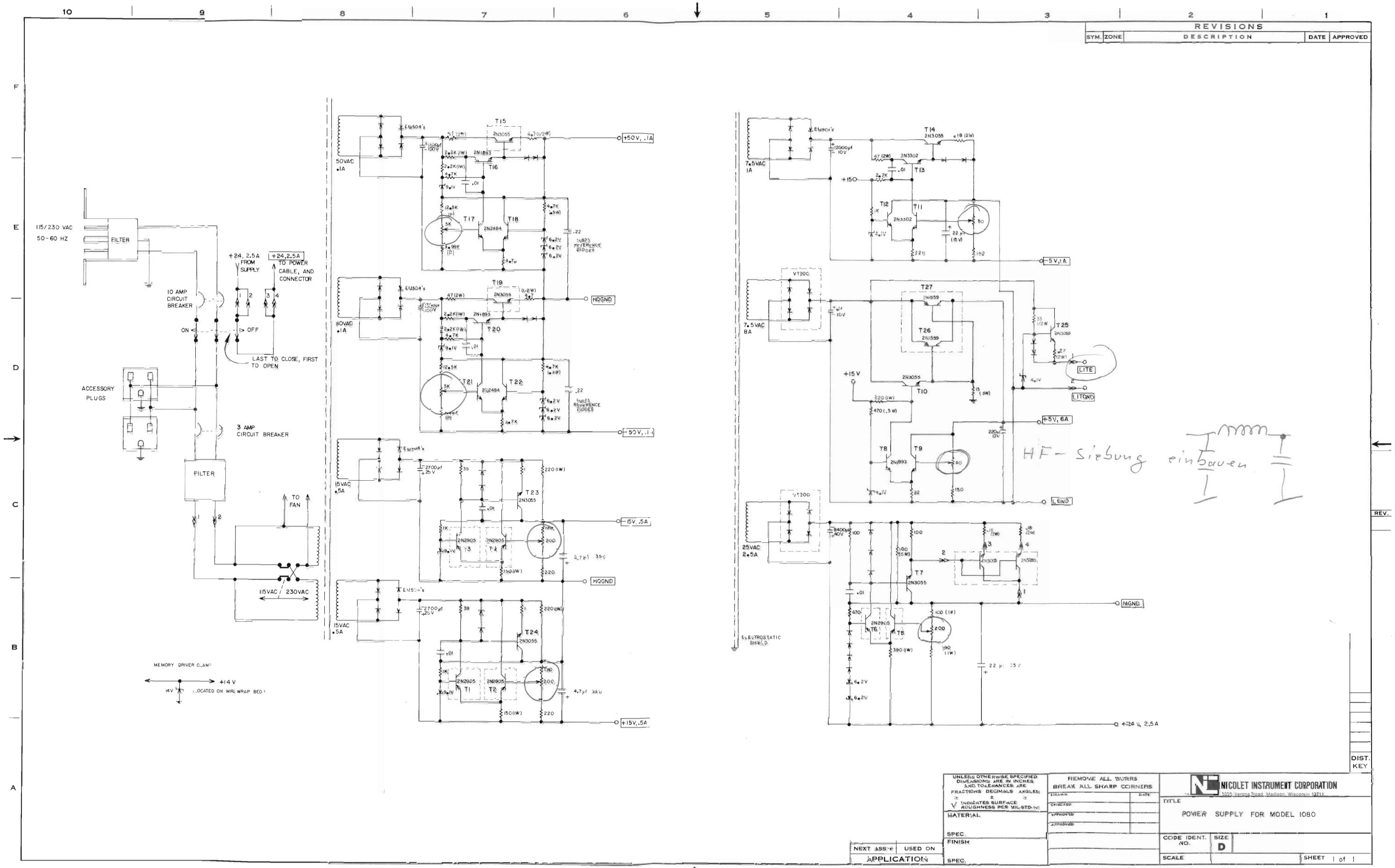
REVISIONS
SYM. ZONE DESCRIPTION DATE APPROVED
115/230 VAC
50-60 HZ
FILTER
10 AMP CIRCUIT BREAKER
ON
OFF
+24, 2.5A FROM SUPPLY
+24, 2.5A TO POWER CABLE, AND CONNECTOR
LAST TO CLOSE, FIRST TO OPEN
ACCESSORY PLUGS
3 AMP CIRCUIT BREAKER
FILTER
TO FAN
115VAC / 230VAC
MEMORY DRIVER CLAMP
+14 V
(LOCATED ON WIRE WRAP BED)
50VAC .1A
+50V, .1A
HQGND
-50V, .1A
15VAC .5A
-15V, .5A
+15V, .5A
7.5VAC 1A
-5V, 1A
7.5VAC 8A
+5V, 6A
LITE
LITGND
LEND
25VAC 2.5A
ELECTROSTATIC SHIELD
MGND
+24 V, 2.5A
HF-Siebung einbauen
NICOLET INSTRUMENT CORPORATION
5225 Verona Road, Madison, Wisconsin 53711
TITLE
POWER SUPPLY FOR MODEL 1080
CODE IDENT. NO.
SIZE D
SCALE
SHEET 1 of 1
REMOVE ALL BURRS
BREAK ALL SHARP CORNERS
UNLESS OTHERWISE SPECIFIED DIMENSIONS ARE IN INCHES AND TOLERANCES ARE
FRACTIONS DECIMALS ANGLES
MATERIAL
SPEC.
FINISH
SPEC.
NEXT ASSY
USED ON
APPLICATION
DRAWN
DATE
CHECKED
APPROVED
REV.
DIST. KEY

Rev. A 6/15/71

REVISIONS				
SYM.	ZONE	DESCRIPTION	DATE	APPROVED

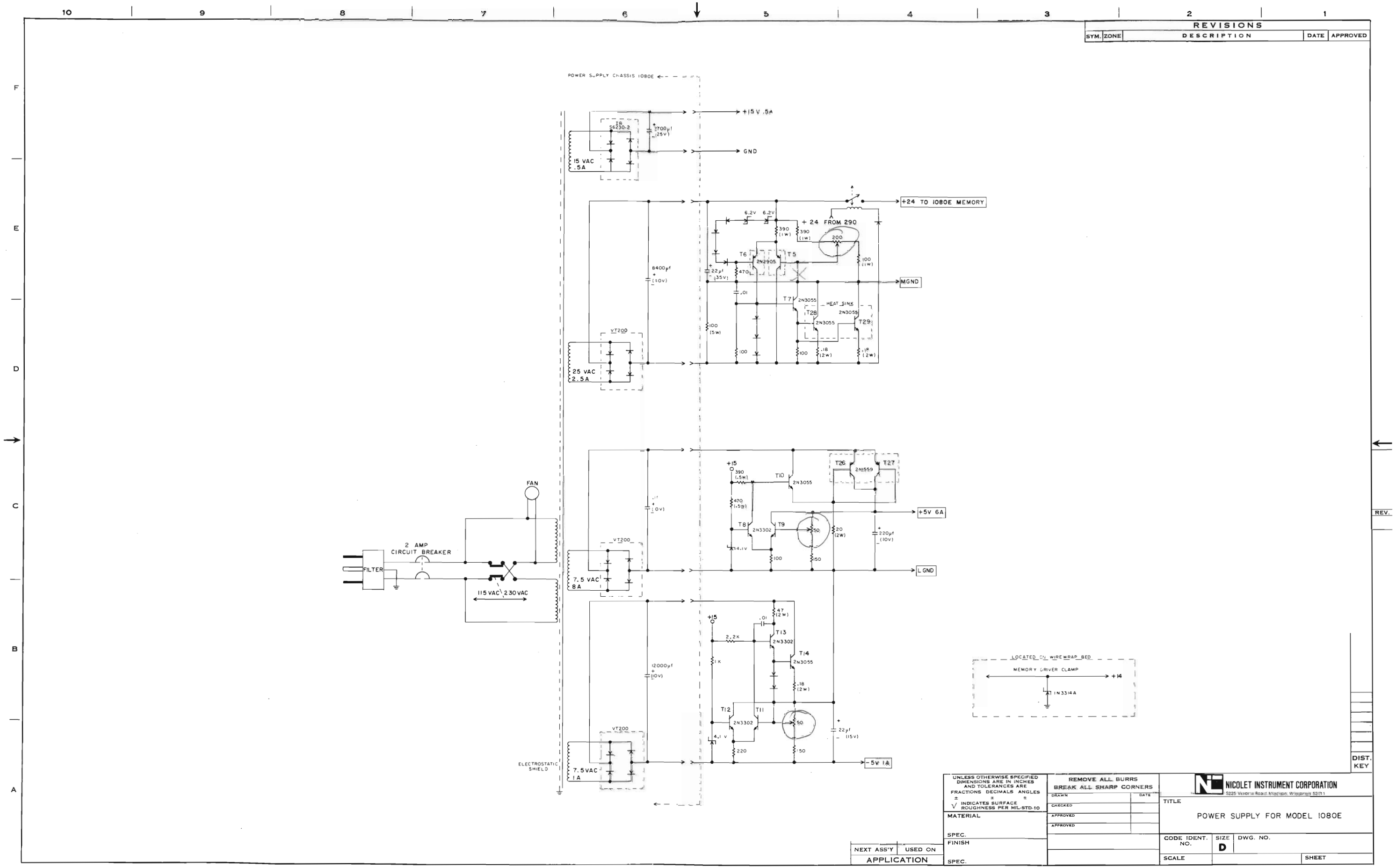

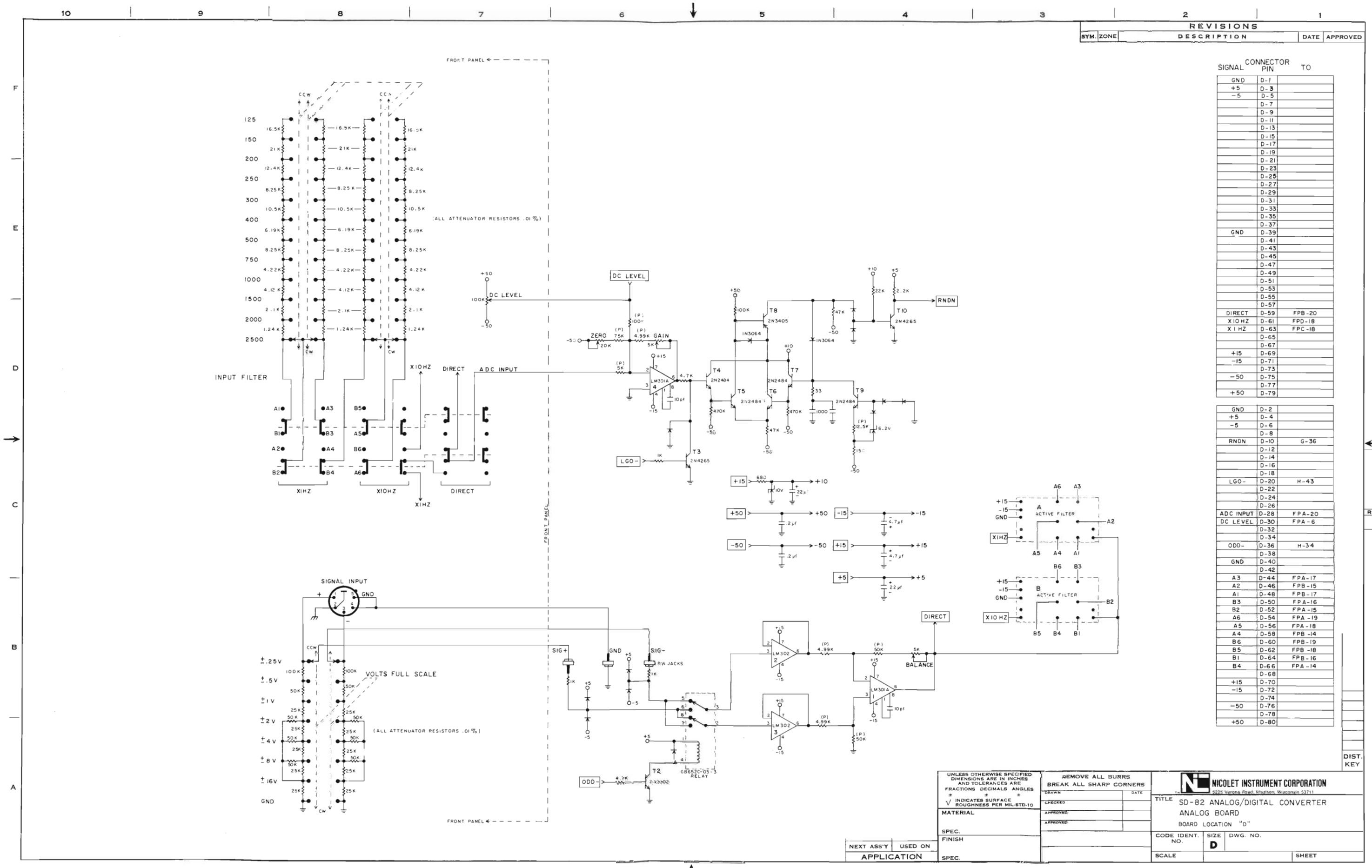

SIGNAL	CONNECTOR PIN	TO
GND	D-1	
+5	D-3	
-5	D-5	
	D-7	
	D-9	
	D-11	
	D-13	
	D-15	
	D-17	
	D-19	
	D-21	
	D-23	
	D-25	
	D-27	
	D-29	
	D-31	
	D-33	
	D-35	
	D-37	
GND	D-39	
	D-41	
	D-43	
	D-45	
	D-47	
	D-49	
	D-51	
	D-53	
	D-55	
	D-57	
DIRECT	D-59	FPB-20
X10HZ	D-61	FPD-18
X1HZ	D-63	FPC-18
	D-65	
	D-67	
+15	D-69	
-15	D-71	
	D-73	
-50	D-75	
	D-77	
+50	D-79	
GND	D-2	
+5	D-4	
-5	D-6	
	D-8	
RNDN	D-10	G-36
	D-12	
	D-14	
	D-16	
	D-18	
LGO-	D-20	H-43
	D-22	
	D-24	
	D-26	
ADC INPUT	D-28	FPA-20
DC LEVEL	D-30	FPA-6
	D-32	
	D-34	
ODD-	D-36	H-34
	D-38	
GND	D-40	
	D-42	
A3	D-44	FPA-17
A2	D-46	FPB-15
A1	D-48	FPB-17
B3	D-50	FPA-16
B2	D-52	FPA-15
A6	D-54	FPA-19
A5	D-56	FPA-18
A4	D-58	FPB-14
B6	D-60	FPB-19
B5	D-62	FPB-18
B1	D-64	FPB-16
B4	D-66	FPA-14
	D-68	
+15	D-70	
-15	D-72	
	D-74	
-50	D-76	
	D-78	
+50	D-80	

REVISIONS				
SYM.	ZONE	DESCRIPTION	DATE	APPROVED

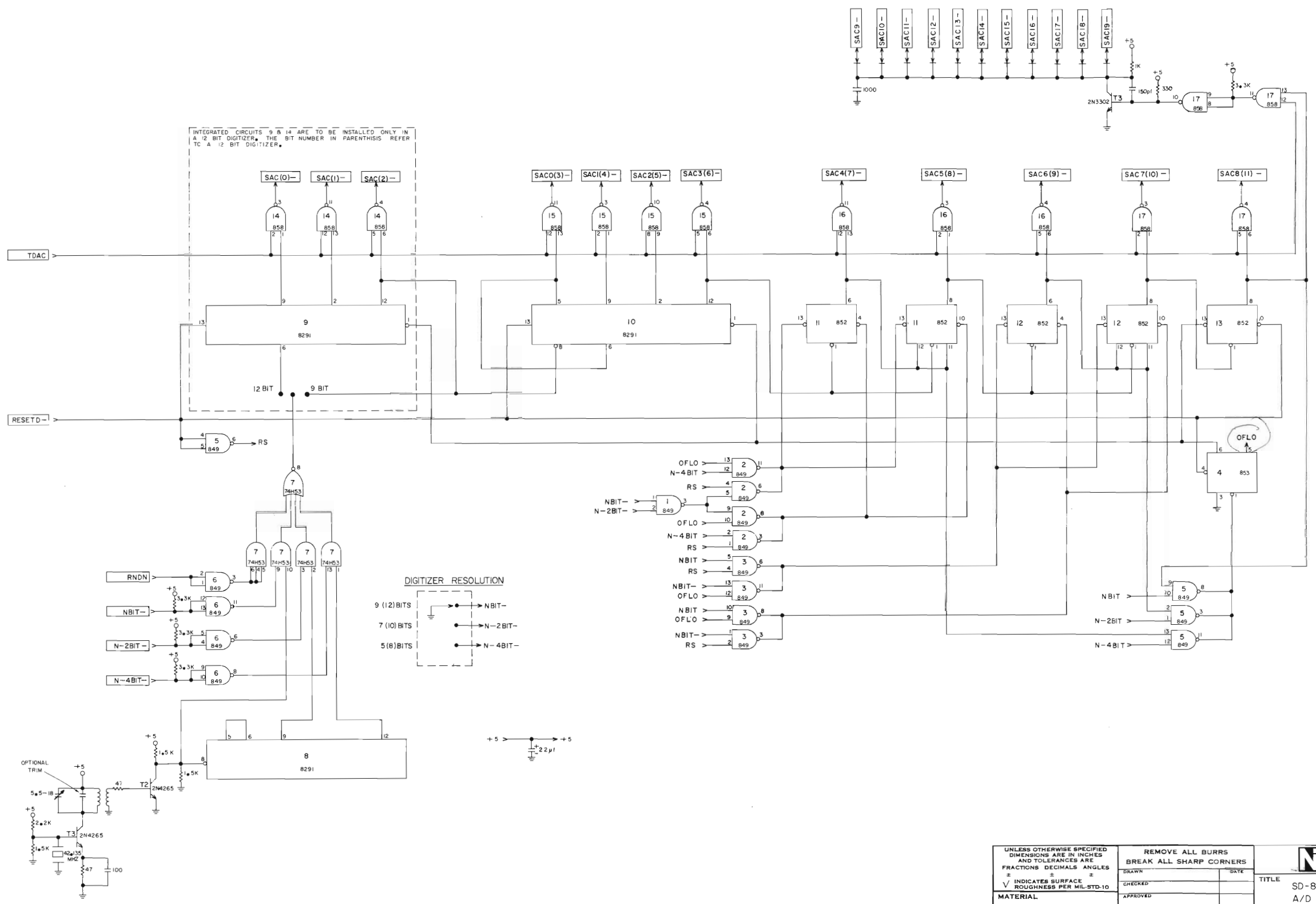

SIGNAL	CONNECTOR PIN	TO
GND	G–1	
+5	G–3	
–5	G–5	
	G–7	
	G–9	
	G–11	
	G–13	
	G–15	
	G–17	
	G–19	
	G–21	
	G–23	
	G–25	
	G–27	
	G–29	
SAC19–	G–31	A–40
SAC18–	G–33	A–38
SAC17–	G–35	A–36
SAC16–	G–37	A–34
GND	G–39	GND
SAC 15–	G–41	A–32
SAC14–	G–43	A–30
	G–45	
	G–47	
	G–49	
	G–51	
	G–53	
	G–55	
TDAC	G–57	H–47
SAC6–	G–59	A–14
SAC5–	G–61	A–12
SAC4–	G–63	A–10
SAC3–	G–65	A–8
	G–67	
+15	G–69	
–15	G–71	
	G–73	
–50	G–75	
	G–77	
+50	G–79	
GND	G–2	
+5	G–4	
–5	G–6	
	G–8	
	G–10	
	G–12	
	G–14	
	G–16	
	G–18	
	G–20	
	G–22	
	G–24	
	G–26	
	G–28	
N–4BIT–	G–30	FPC–20
NBIT–	G–32	FPC–19
N–2BIT–	G–34	FPD–19
RNDN	G–36	D–10
RESETD–	G–38	H–45
GND	G–40	
SAC13–	G–42	A–28
SAC12–	G–44	A–26
SAC11–	G–46	A–24
SAC10–	G–48	A–22
SAC9–	G–50	A–20
SAC8–	G–52	A–18
SAC7–	G–54	A–16
SAC1–	G–56	A–4
SAC2–	G–58	A–6
SAC0–	G–60	A–2
	G–62	
	G–64	
	G–66	
	G–68	
+15	G–70	
–15	G–72	
	G–74	
–50	G–76	
	G–78	
+50	G–80	

REV.

DIST. KEY

NEXT ASS'Y	USED ON
APPLICATION	

UNLESS OTHERWISE SPECIFIED DIMENSIONS ARE IN INCHES AND TOLERANCES ARE FRACTIONS ± DECIMALS ± ANGLES ±
√ INDICATES SURFACE ROUGHNESS PER MIL-STD-10

MATERIAL
SPEC.
FINISH
SPEC.

REMOVE ALL BURRS
BREAK ALL SHARP CORNERS

		DATE
DRAWN		
CHECKED		
APPROVED		
APPROVED		

NICOLET INSTRUMENT CORPORATION
5225 Verona Road Madison, Wisconsin 53711

TITLE
SD-82 ANALOG TO DIGITAL CONVERTER
A/D DATA SCALER
BOARD LOCATION "G"

CODE IDENT. NO.	SIZE	DWG. NO.
	D	

SCALE | SHEET

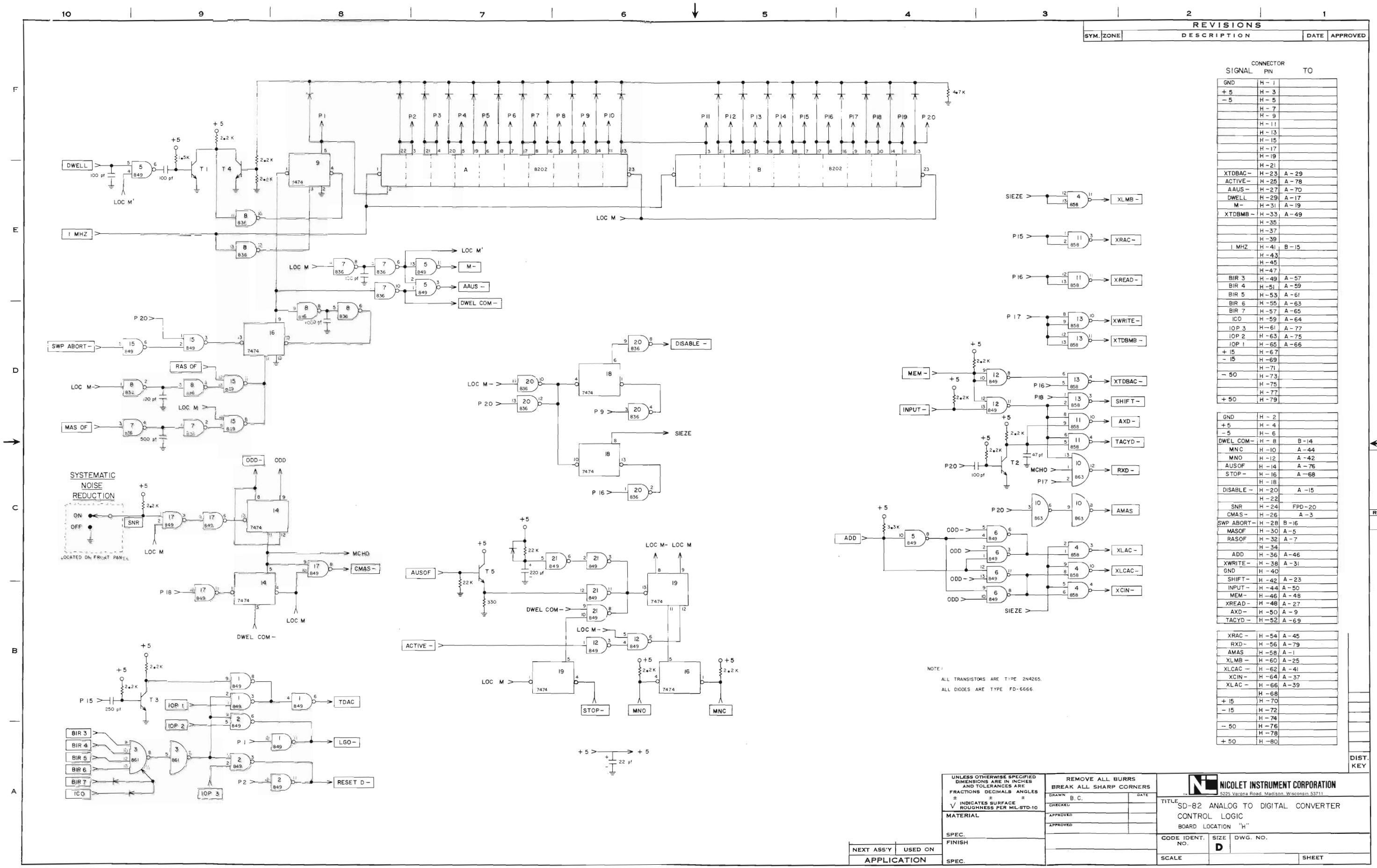

SIGNAL	CONNECTOR PIN	TO
GND	H - 1	
+ 5	H - 3	
- 5	H - 5	
	H - 7	
	H - 9	
	H - 11	
	H - 13	
	H - 15	
	H - 17	
	H - 19	
	H - 21	
XTDBAC -	H - 23	A - 29
ACTIVE -	H - 25	A - 78
AAUS -	H - 27	A - 70
DWELL	H - 29	A - 17
M -	H - 31	A - 19
XTDBMB -	H - 33	A - 49
	H - 35	
	H - 37	
	H - 39	
I MHZ	H - 41	B - 15
	H - 43	
	H - 45	
	H - 47	
BIR 3	H - 49	A - 57
BIR 4	H - 51	A - 59
BIR 5	H - 53	A - 61
BIR 6	H - 55	A - 63
BIR 7	H - 57	A - 65
ICO	H - 59	A - 64
IOP 3	H - 61	A - 77
IOP 2	H - 63	A - 75
IOP 1	H - 65	A - 66
+ 15	H - 67	
- 15	H - 69	
	H - 71	
- 50	H - 73	
	H - 75	
	H - 77	
+ 50	H - 79	

GND	H - 2	
+ 5	H - 4	
- 5	H - 6	
DWEL COM -	H - 8	B - 14
MNC	H - 10	A - 44
MNO	H - 12	A - 42
AUSOF	H - 14	A - 76
STOP -	H - 16	A - 68
	H - 18	
DISABLE -	H - 20	A - 15
	H - 22	
SNR	H - 24	FPD - 20
CMAS -	H - 26	A - 3
SWP ABORT -	H - 28	B - 16
MASOF	H - 30	A - 5
RASOF	H - 32	A - 7
	H - 34	
ADD	H - 36	A - 46
XWRITE -	H - 38	A - 31
GND	H - 40	
SHIFT -	H - 42	A - 23
INPUT -	H - 44	A - 50
MEM -	H - 46	A - 48
XREAD -	H - 48	A - 27
AXD -	H - 50	A - 9
TACYD -	H - 52	A - 69

XRAC -	H - 54	A - 45
RXD -	H - 56	A - 79
AMAS	H - 58	A - 1
XLMB -	H - 60	A - 25
XLCAC -	H - 62	A - 41
XCIN -	H - 64	A - 37
XLAC -	H - 66	A - 39
	H - 68	
+ 15	H - 70	
- 15	H - 72	
	H - 74	
- 50	H - 76	
	H - 78	
+ 50	H - 80	

REVISIONS				
SYM.	ZONE	DESCRIPTION	DATE	APPROVED

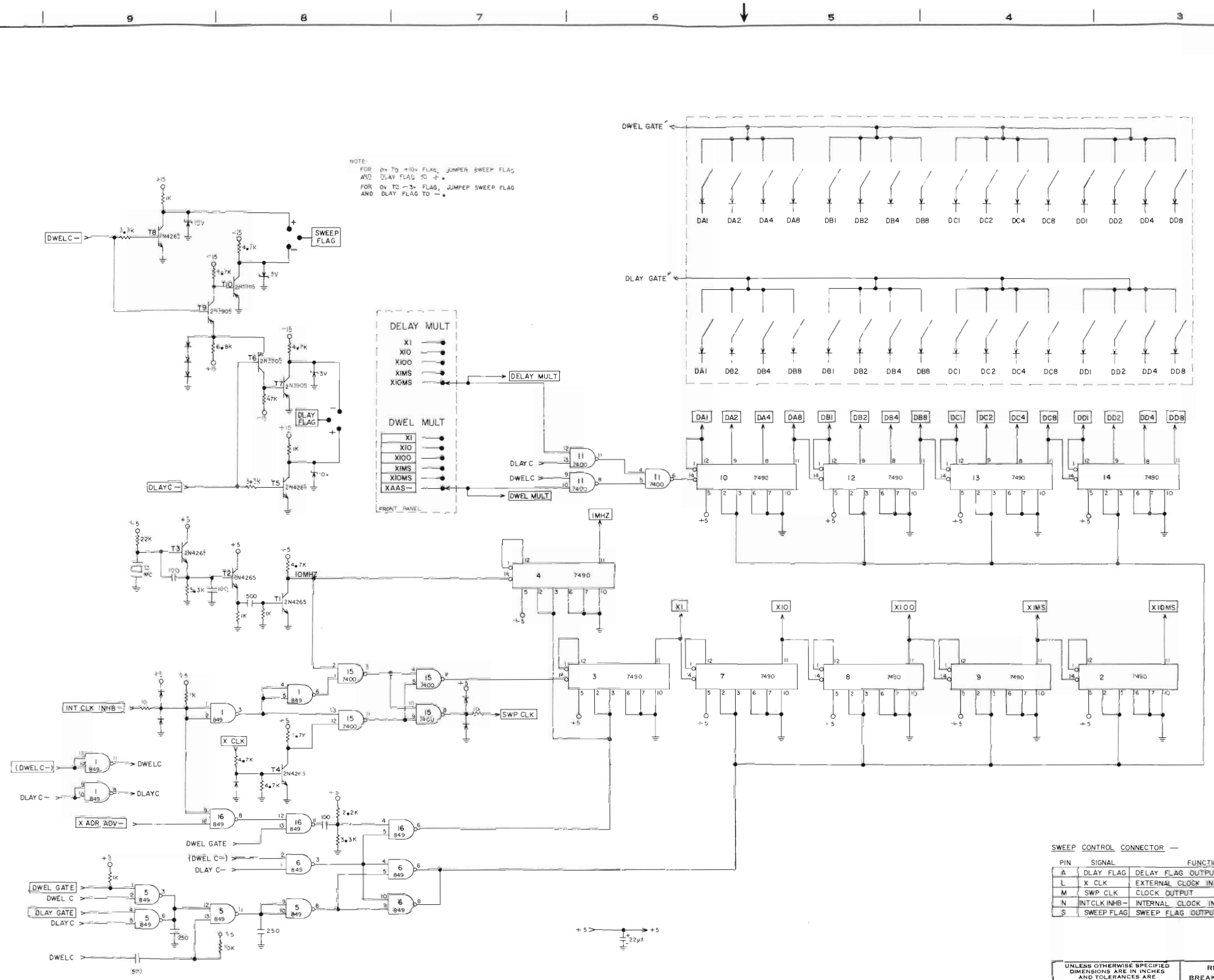

SWEEP CONTROL CONNECTOR —

PIN	SIGNAL	FUNCTION
A	DLAY FLAG	DELAY FLAG OUTPUT
L	X CLK	EXTERNAL CLOCK INPUT
M	SWP CLK	CLOCK OUTPUT
N	INT CLK INHB−	INTERNAL CLOCK INHIBIT
S	SWEEP FLAG	SWEEP FLAG OUTPUT

SIGNAL	CONNECTOR PIN	TO
GND	C−1	
+5	C−3	
−5	C−5	
	C−7	
	C−9	
	C−11	
	C−13	
	C−15	
	C−17	
	C−19	
	C−21	
	C−23	
	C−25	
	C−27	
	C−29	
	C−31	
	C−33	
	C−35	
	C−37	
GND	C−39	
X ADR ADV−	C−41	FPA−18
	C−43	
	C−45	
	C−47	
	C−49	
	C−51	
	C−53	
DWEL C−	C−55	H−17
DELAY FLAG	C−57	FPB−18
SWEEPFLAG	C−59	FPC−18
DWEL GATE	C−61	E−66 H−11
DLAY GATE	C−63	H−9
INTCLKINHB−	C−65	FPD−19
	C−67	
+15	C−69	
−15	C−71	
	C−73	
−50	C−75	
	C−75	
+50	C−79	

GND	C−2	
+5	C−4	
−5	C−6	
DD4	C−8	FPA−3
DD2	C−10	FPC−2
DD8	C−12	FPB−3
DD1	C−14	FPB−2
DC4	C−16	FPC−5
DC2	C−18	FPB−5
DC8	C−20	FPA−6
DC1	C−22	FPA−5
DB4	C−24	FPB−8
DB2	C−26	FPA−8
DB8	C−28	FPC−8
DB1	C−30	FPC−7
DELAY MULT	C−32	FPC−15
DWEL MULT	C−34	FPA−16
DA4	C−36	FPB−12
DA2	C−38	FPA−12
GND	C−40	
DA8	C−42	FPC−12
DA1	C−44	FPC−11
SWP CLK	C−46	FPD−17
X100	C−48	FPC−14
X10	C−50	FPB−14
X1	C−52	FPA−14
(DWEL C−)	C−54	H−13
DLAYC−	C−56	E−62 H−8
XIOMS	C−58	FPB−15
XIMS	C−60	FPA−15
IMHZ	C−62	B−15
XCLK	C−64	FPB−18
	C−66	
	C−68	
+15	C−70	
−15	C−72	
	C−74	
−50	C−76	
	C−78	
+50	C−80	

REV.

DIST. KEY

NEXT ASS'Y	USED ON
APPLICATION	

UNLESS OTHERWISE SPECIFIED DIMENSIONS ARE IN INCHES AND TOLERANCES ARE
FRACTIONS ± DECIMALS ± ANGLES ±
√ INDICATES SURFACE ROUGHNESS PER MIL-STD-10

MATERIAL
SPEC.
FINISH
SPEC.

REMOVE ALL BURRS
BREAK ALL SHARP CORNERS

		DATE
DRAWN		
CHECKED		
APPROVED		
APPROVED		

NICOLET INSTRUMENT CORPORATION
5225 Verona Road, Madison, Wisconsin 53711

TITLE
SW−80 SWEEP CONTROL
FREQ. DIVIDER
BOARD LOCATION "C"

CODE IDENT. NO.	SIZE	DWG. NO.
	D	

SCALE | SHEET

REVISIONS				
SYM.	ZONE	DESCRIPTION	DATE	APPROVED

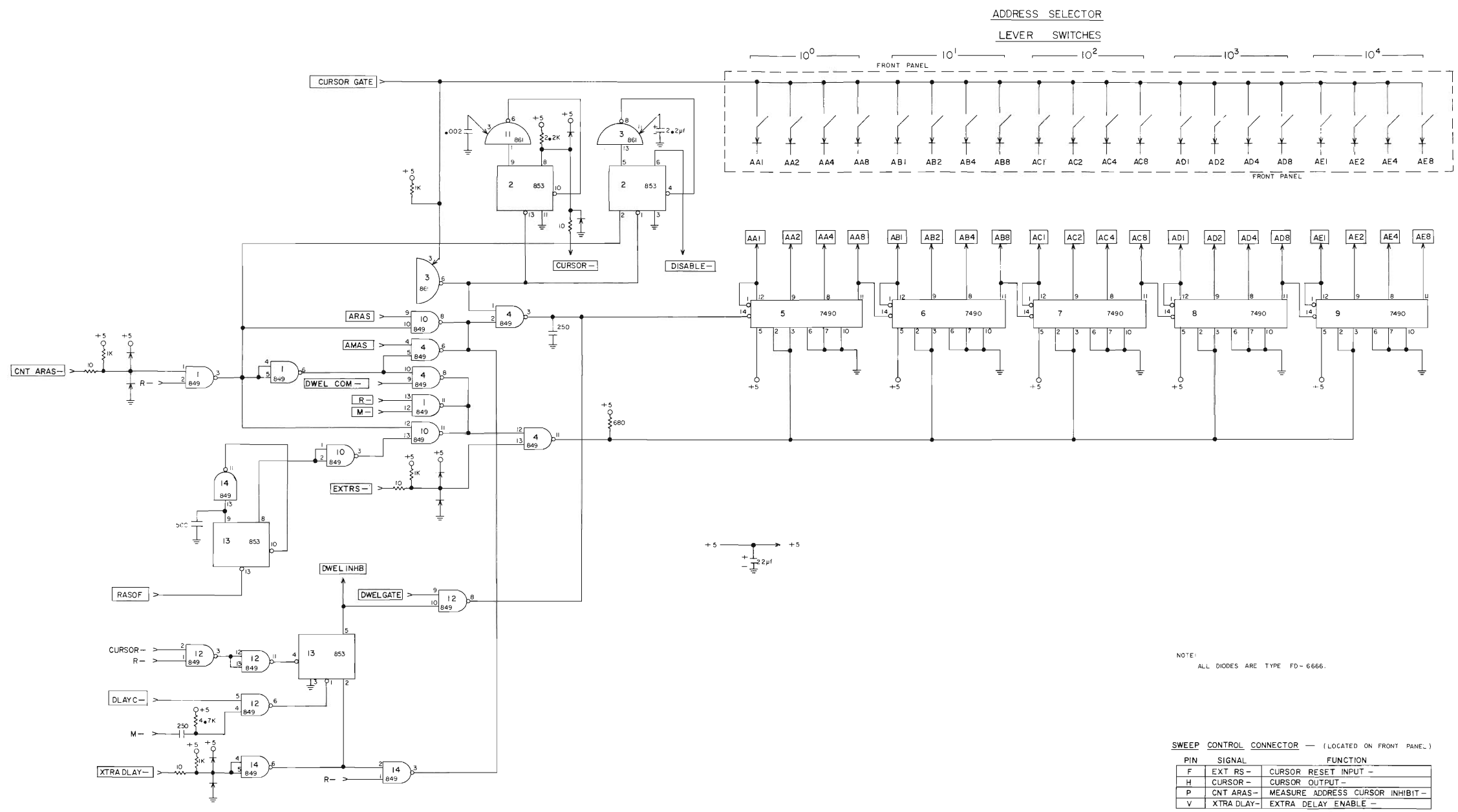

SWEEP CONTROL CONNECTOR — (LOCATED ON FRONT PANEL)

PIN	SIGNAL	FUNCTION
F	EXT RS—	CURSOR RESET INPUT —
H	CURSOR—	CURSOR OUTPUT —
P	CNT ARAS—	MEASURE ADDRESS CURSOR INHIBIT —
V	XTRA DLAY—	EXTRA DELAY ENABLE —

SIGNAL	CONNECTOR PIN	TO
GND	E-1	
+5	E-3	
-5	E-5	
	E-7	
	E-9	
	E-11	
	E-13	
	E-15	
	E-17	
	E-19	
	E-21	
	E-23	
	E-25	
	E-27	
	E-29	
	E-31	
RASOF	E-33	A-7
ARAS	E-35	A-11
AA4	E-37	FPA-11
GND	E-39	
	E-41	
	E-43	
	E-45	
	E-47	
	E-49	
	E-51	
	E-53	
	E-55	
CNTARAS—	E-57	FPD-20
R—	E-59	H-15, A-21
	E-61	
	E-63	
XTRADLAY—	E-65	FPD-16
	E-67	
+15	E-69	
-15	E-71	
	E-73	
-50	E-75	
	E-77	
+50	E-79	

GND	E-2	
+5	E-4	
-5	E-6	
AE4	E-8	FPC-1
AE2	E-10	FPB-1
AE8	E-12	FPA-2
AE1	E-14	FPA-1
AD4	E-16	FPB-4
AD2	E-18	FPA-4
AD8	E-20	FPC-4
AD1	E-22	FPC-3
AC4	E-24	FPA-7
AC2	E-26	FPC-6
AC8	E-28	FPB-7
AC1	E-30	FPB-6
AB4	E-32	FPC-9
AB2	E-34	FPB-9
AB8	E-36	FPA-10
AB1	E-38	FPA-9
GND	E-40	
AA2	E-42	FPC-10
AA8	E-44	FPB-11
AA1	E-46	FPB-10
AMAS	E-48	G-62, A-1
DWELCOM—	E-50	G-60, H-7, B-14
EXTRS—	E-52	FPB-20
CURSORGATE	E-54	FPC-13
DISABLE—	E-56	A-15
CURSOR—	E-58	FPC-20
M—	E-60	H-5, A-19
DLAYC—	E-62	H-8, C-56
DWEL INHB	E-64	H-33
DWELGATE	E-66	H-11, C-61
	E-68	
+15	E-70	
-15	E-72	
	E-74	
-50	E-76	
	E-78	
+50	E-80	

REV.

DIST. KEY

UNLESS OTHERWISE SPECIFIED DIMENSIONS ARE IN INCHES AND TOLERANCES ARE FRACTIONS DECIMALS ANGLES ± ± ±
√ INDICATES SURFACE ROUGHNESS PER MIL-STD-10

MATERIAL

SPEC.

FINISH

SPEC.

REMOVE ALL BURRS
BREAK ALL SHARP CORNERS

	DATE
DRAWN	
CHECKED	
APPROVED	
APPROVED	

NICOLET INSTRUMENT CORPORATION
5225 Verona Road, Madison, Wisconsin 53711

TITLE
SW-80 SWEEP CONTROL
ADDRESS CURSOR
BOARD LOCATION "E"

CODE IDENT. NO.	SIZE	DWG. NO.
	D	

SCALE | SHEET

NEXT ASS'Y	USED ON
APPLICATION	

REVISIONS				
SYM.	ZONE	DESCRIPTION	DATE	APPROVED

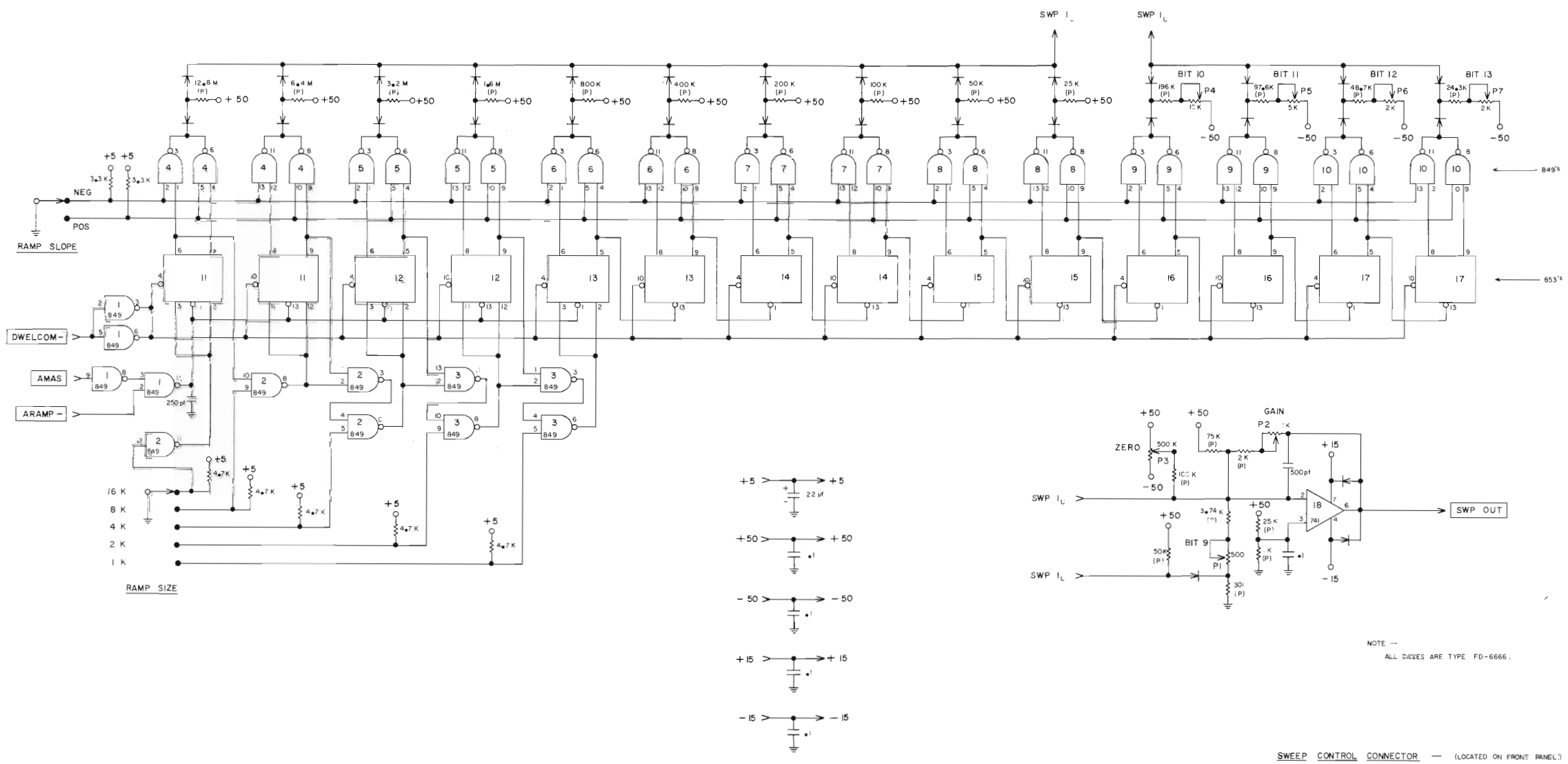

SIGNAL	CONNECTOR PIN	TO
GND	G-1	
+5	G-3	
-5	G-5	
	G-7	
	G-9	
	G-11	
	G-13	
	G-15	
	G-17	
	G-19	
	G-21	
	G-23	
	G-25	
	G-27	
	G-29	
	G-31	
	G-33	
	G-35	
	G-37	
GND	G-39	
	G-41	
	G-43	
	G-45	
	G-47	
	G-49	
	G-51	
	G-53	
	G-55	
	G-57	
	G-59	
	G-61	
	G-63	
	G-65	
	G-67	
+15	G-69	
-15	G-71	
	G-73	
-50	G-75	
	G-77	
+50	G-79	
GND	G-2	
+5	G-4	
-5	G-6	
	G-8	
	G-10	
	G-12	
	G-14	
	G-16	
	G-18	
	G-20	
	G-22	
	G-24	
	G-26	
	G-28	
	G-30	
	G-32	
	G-34	
	G-36	
	G-38	
GND	G-40	
	G-42	
	G-44	
	G-46	
	G-48	
	G-50	
	G-52	
	G-54	
	G-56	
ARAMP-	G-58	H-31
DWELCOM-	G-60	B-14, E-50, H-7
AMAS	G-62	A-1, E-48
SWP OUT	G-64	FPA-20
	G-66	
	G-68	
+15	G-70	
-15	G-72	
	G-74	
-50	G-76	
	G-78	
+50	G-80	

SWEEP CONTROL CONNECTOR — (LOCATED ON FRONT PANEL)

PIN	SIGNAL	FUNCTION
E	SWP OUT	SWEEP RAMP OUTPUT

DIST. KEY

REV.

UNLESS OTHERWISE SPECIFIED DIMENSIONS ARE IN INCHES AND TOLERANCES ARE
FRACTIONS ± DECIMALS ± ANGLES ±
√ INDICATES SURFACE ROUGHNESS PER MIL-STD-10

MATERIAL
SPEC.
FINISH
SPEC.

NEXT ASS'Y | USED ON
APPLICATION

REMOVE ALL BURRS
BREAK ALL SHARP CORNERS

		DATE
DRAWN	B.C.	
CHECKED		
APPROVED		
APPROVED		

NICOLET INSTRUMENT CORPORATION
3225 Verona Road, Madison, Wisconsin 53711

TITLE
SW-80 SWEEP CONTROL
RAMP GENERATOR
BOARD LOCATION "G"

CODE IDENT. NO. | SIZE D | DWG. NO.
SCALE | SHEET

REVISIONS				
SYM.	ZONE	DESCRIPTION	DATE	APPROVED

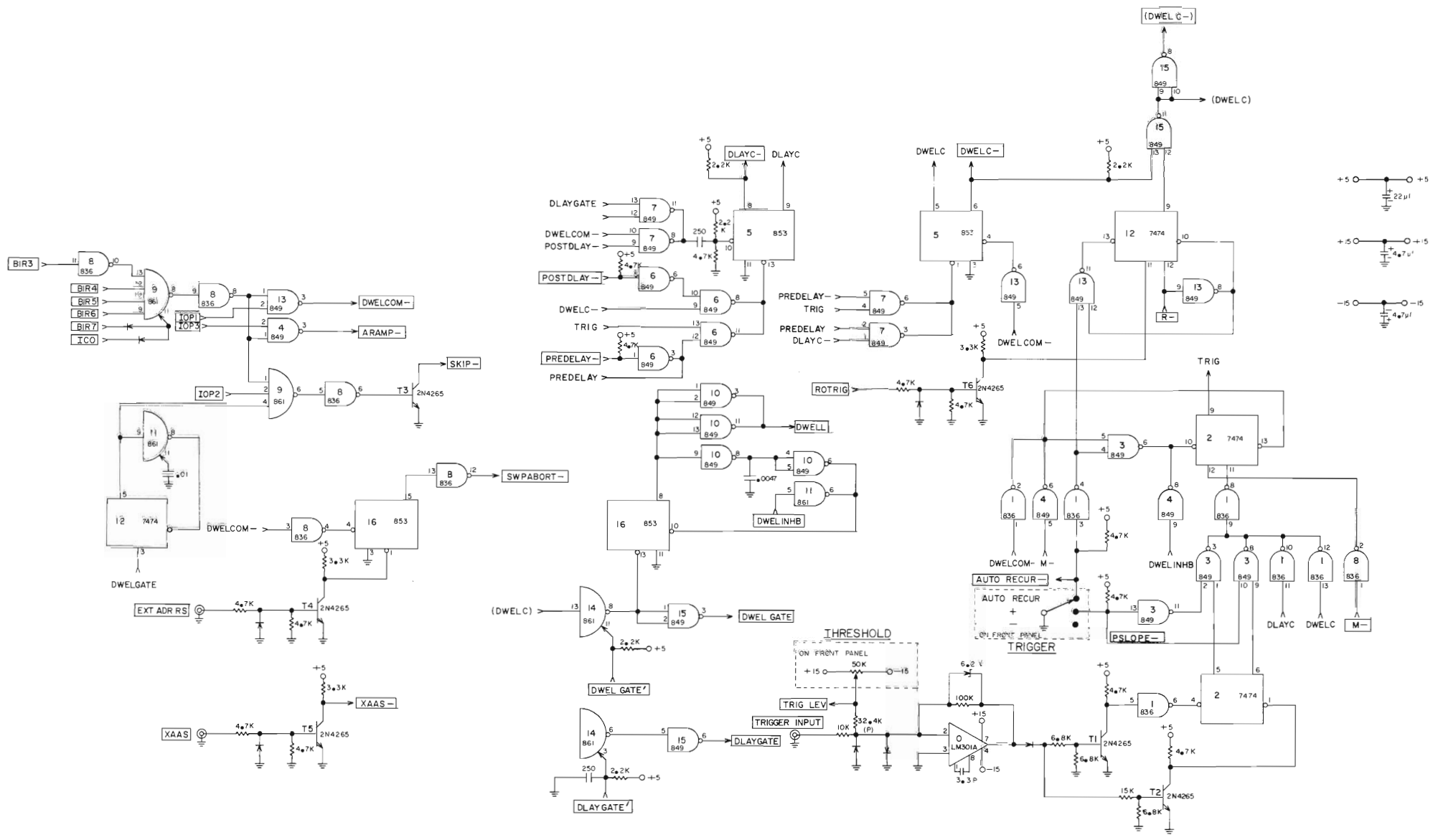

SIGNAL	CONNECTOR PIN	TO
GND	H-1	
+5	H-3	
–5	H-5	
DWELCOM–	H-7	G-60, E-50, B-14
DLAY GATE	H-9	C-63
DWELGATE	H-11	E-66, C-61
(DWELC–)	H-13	C-54
R–	H-15	E-59, A-21
DWELC–	H-17	C-55
IOP1	H-19	A-66
PREDLAY–	H-21	FPB-16
POSTDLAY–	H-23	FPC-16
PSLOPE–	H-25	FPA-17
AUTO RECUR–	H-27	FPB-17
IOP 3	H-29	A-77
ARAMP–	H-31	G-58
DWEL INHB	H-33	E-64
	H-35	
	H-37	
GND	H-39	
XAAS –	H-41	FPD-14
	H-43	
	H-45	
	H-47	
	H-49	
	H-51	
	H-53	
	H-55	
M–	H-57	E-60, A-19
	H-59	
	H-61	
	H-63	
	H-65	
	H-67	
+15	H-69	
–15	H-71	
	H-73	
–50	H-75	
	H-77	
+50	H-79	

GND	H-2	
+5	H-4	
–5	H-6	
DLAYC–	H-8	E-62 C-56
	H-10	
	H-12	
	H-14	
ROTRIG	H-16	FPD-15
	H-18	
	H-20	
	H-22	
	H-24	
	H-26	
	H-28	
	H-30	
DWELGATE'	H-32	FPA-13
DLAYGATE'	H-34	FPB-13
DWELL	H-36	A-17
	H-38	
GND	H-40	
IOP2	H-42	A-75
BIR7	H-44	A-65
ICO	H-46	A-64
BIR6	H-48	A-63
BIR5	H-50	A-61
BIR4	H-52	A-59
BIR3	H-54	A-57
SWPABORT–	H-56	B-16
SKIP –	H-58	A-33
EXTADRRS	H-60	FPA-19
XAAS	H-62	FPB-19
TRIGINPUT	H-64	FPC-19
TRIG LEV	H-66	FPC-17
	H-68	
+15	H-70	
–15	H-72	
	H-74	
–50	H-76	
	H-78	
+50	H-80	

SWEEP CONTROL CONNECTOR — (LOCATED ON FRONT PANEL)

PIN	SIGNAL	FUNCTION
C	EXT ADR RS	EXTERNAL ADDRESS RESET INPUT
D	TRIG INPUT	TRIGGER INPUT
K	XAAS	EXTERNAL ADDRESS ADVANCE INPUT
U	RO TRIG	REAL TIME READOUT TRIGGER

REV.

DIST. KEY

UNLESS OTHERWISE SPECIFIED DIMENSIONS ARE IN INCHES AND TOLERANCES ARE FRACTIONS DECIMALS ANGLES ± ± ±
√ INDICATES SURFACE ROUGHNESS PER MIL-STD-10

MATERIAL
SPEC.
FINISH
SPEC.

NEXT ASS'Y | USED ON
APPLICATION

REMOVE ALL BURRS
BREAK ALL SHARP CORNERS

	DATE
DRAWN	
CHECKED	
APPROVED	
APPROVED	

NICOLET INSTRUMENT CORPORATION
5225 Verona Road, Madison, Wisconsin 53711

TITLE
SW-80 SWEEP CONTROL
CONTROL LOGIC
BOARD LOCATION "H"

CODE IDENT. NO. | SIZE D | DWG. NO.
SCALE | SHEET

REVISIONS				
SYM.	ZONE	DESCRIPTION	DATE	APPROVED

Timing Diagram

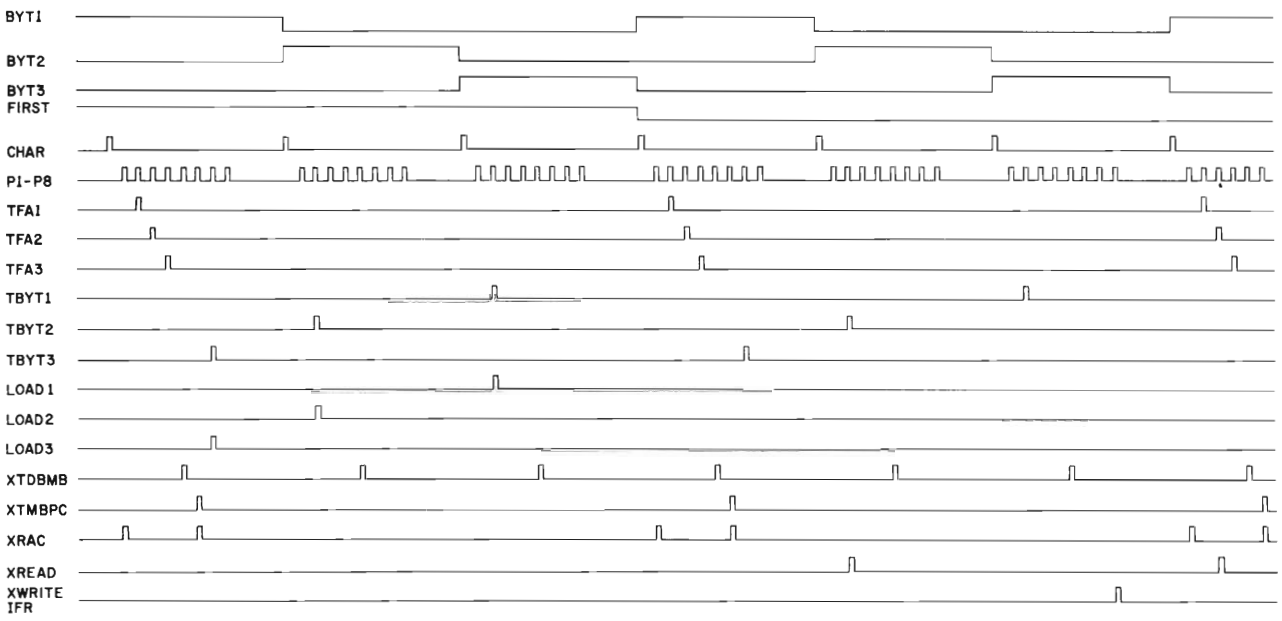

General Information

GENERAL SPECIFICATIONS

Description:	High Speed Photo-electric paper tape reader for fanfold tapes
Tape:	Translucent or opaque without adjustment changes
Speed:	300 CPS (Max.)
Power:	115/230 ± 10%, 50/60 Hz
Physical:	Mounts into lower portion of NIC BNC Series instruments (Optional NIC 297 RM Cabinet available for 19" rack using 7" of vertical space)
Application:	BNC Series system (Optional NIC 297 RM Cabinet allows use with any 19 0 or BNC Series system produced)
Operation:	Computer operation using same instructions as older paper tape readers or binary tapes can be read automatically without intervention of computer
Light Source:	Automotive type 211 (spare included)

LAMP REPLACEMENT:

1. Detach the black panel on the front of the reader by removing the five (5) parametric screws. (Do not remove the central screw.)
2. Replace lamp and re-assemble.

PHOTO TRANSISTOR ARRAY ADJUSTMENT - WITHOUT TESTER

1. Note (measure) the existing voltage across the lamp (approx. 7.5 volts).
2. Lamp voltage is adjusted by the potentiometer on the rear. Turn this control fully counter-clockwise until the lamp is at its minimum brightness.
3. Loosen the two (2) silver screws which hold the photo transistor array.
4. Put a program into the computer using the following two (2) instructions:

   Location: 0 44463
   1 0

   (See page 48 of the Programming Manual)
5. Start processor.
6. Without tape in the reader, move photo transistor array until accumulator bits 0 through 7 are lit and tighten the two (2) silver screws.
7. Readjust the lamp voltage to its original value.

PHOTO TRANSISTOR ARRAY ADJUSTMENT USING NICOLET READER TESTER

1. Remove 20 conductor cable from photo transistor array connector and plug in tester cable. Also plug 115/230 power cable into tester.
2. Loosen the two (2) silver screws which hold the photo transistor array.
3. Turn on tester and adjust lamp voltage to 7.5 volts.
4. Without tape in the reader, move array housing until all nine (9) meters read maximally and tighten the two (2) silver screws.
5. Readjust the lamp voltage so the highest meter reading is 500 μA.

   IMPORTANT: The least sensitive meter should read no less than the 500 μA while the most sensitive reads 500 μA.

NEXT ASS'Y	USED ON
APPLICATION	

UNLESS OTHERWISE SPECIFIED DIMENSIONS ARE IN INCHES AND TOLERANCES ARE FRACTIONS ± DECIMALS ± ANGLES ±
INDICATES SURFACE ROUGHNESS PER MIL-STD-10

MATERIAL
SPEC.
FINISH
SPEC.

REMOVE ALL BURRS
BREAK ALL SHARP CORNERS

		DATE
DRAWN		
CHECKED		
APPROVED		
APPROVED		

NICOLET INSTRUMENT CORPORATION

TITLE
NIC 297 DATA SHEET

CODE IDENT. NO.	SIZE	DWG. NO.
	D	

SCALE | SHEET

REV.

DIST. KEY

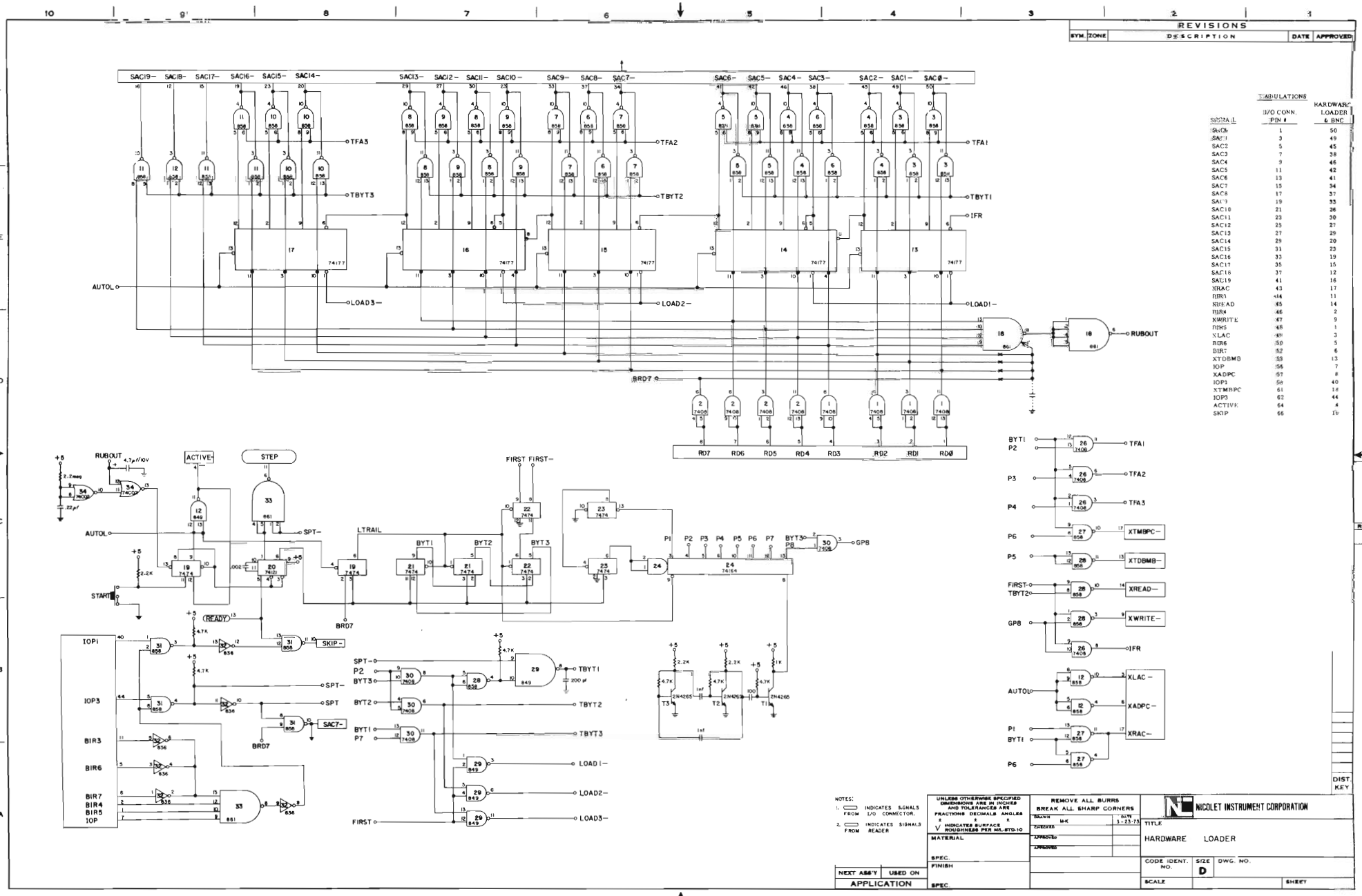

TABULATIONS

SIGNAL	I/O CONN. PIN #	HARDWARE LOADER & BNC
SAC0	1	50
SAC1	3	49
SAC2	5	45
SAC3	7	38
SAC4	9	46
SAC5	11	42
SAC6	13	41
SAC7	15	34
SAC8	17	37
SAC9	19	33
SAC10	21	26
SAC11	23	30
SAC12	25	27
SAC13	27	29
SAC14	29	20
SAC15	31	23
SAC16	33	19
SAC17	35	15
SAC18	37	12
SAC19	41	16
XRAC	43	17
BIR3	44	11
XREAD	45	14
BIR4	46	2
XWRITE	47	9
BIR5	48	1
XLAC	49	3
BIR6	50	5
BIR7	52	6
XTDBMB	53	13
IOP	56	7
XADPC	57	8
IOP3	58	40
XTMBPC	61	18
IOP3	62	44
ACTIVE	64	4
SKIP	66	10

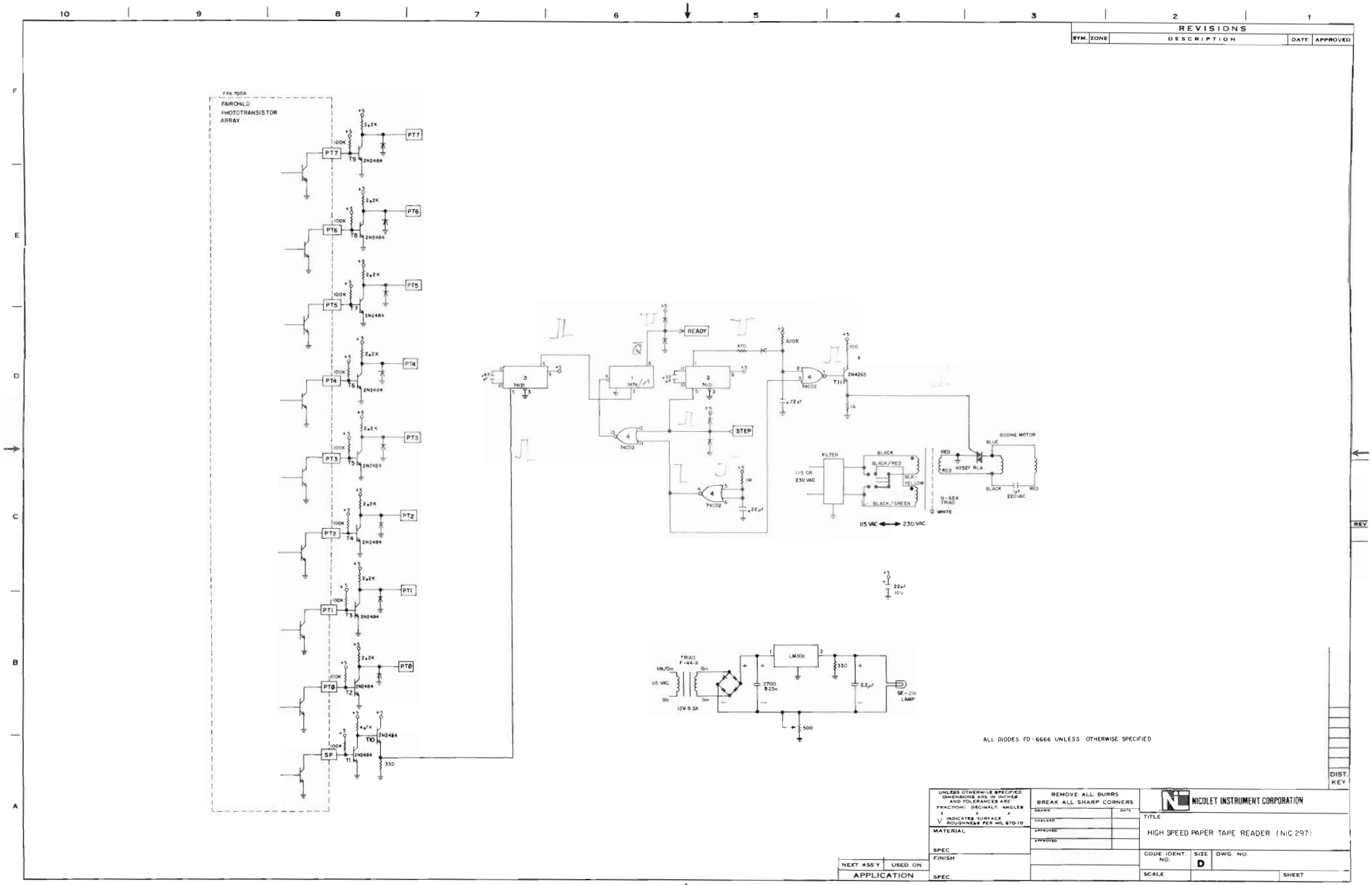
REVISIONS
SYM. ZONE DESCRIPTION DATE APPROVED
FPA 700A
FAIRCHILD
PHOTOTRANSISTOR
ARRAY
PT7
PT6
PT5
PT4
PT3
PT2
PT1
PT0
SP
2N2484
2N4265
READY
STEP
74121
74C02
FILTER
115 OR
230 VAC
BODINE MOTOR
40527 RCA
115 VAC ⟷ 230 VAC
TRIAD
F-44-X
LM309
GE-211
LAMP
ALL DIODES FD-6666 UNLESS OTHERWISE SPECIFIED
DIST. KEY
REV
UNLESS OTHERWISE SPECIFIED DIMENSIONS ARE IN INCHES AND TOLERANCES ARE
FRACTIONS: DECIMALS: ANGLES
MATERIAL
SPEC.
FINISH
SPEC.
NEXT ASS'Y USED ON
APPLICATION
REMOVE ALL BURRS
BREAK ALL SHARP CORNERS
DRAWN
CHECKED
APPROVED
APPROVED
DATE
NICOLET INSTRUMENT CORPORATION
TITLE
HIGH SPEED PAPER TAPE READER (NIC 297)
CODE IDENT. NO.
SIZE D
DWG. NO.
SCALE
SHEET

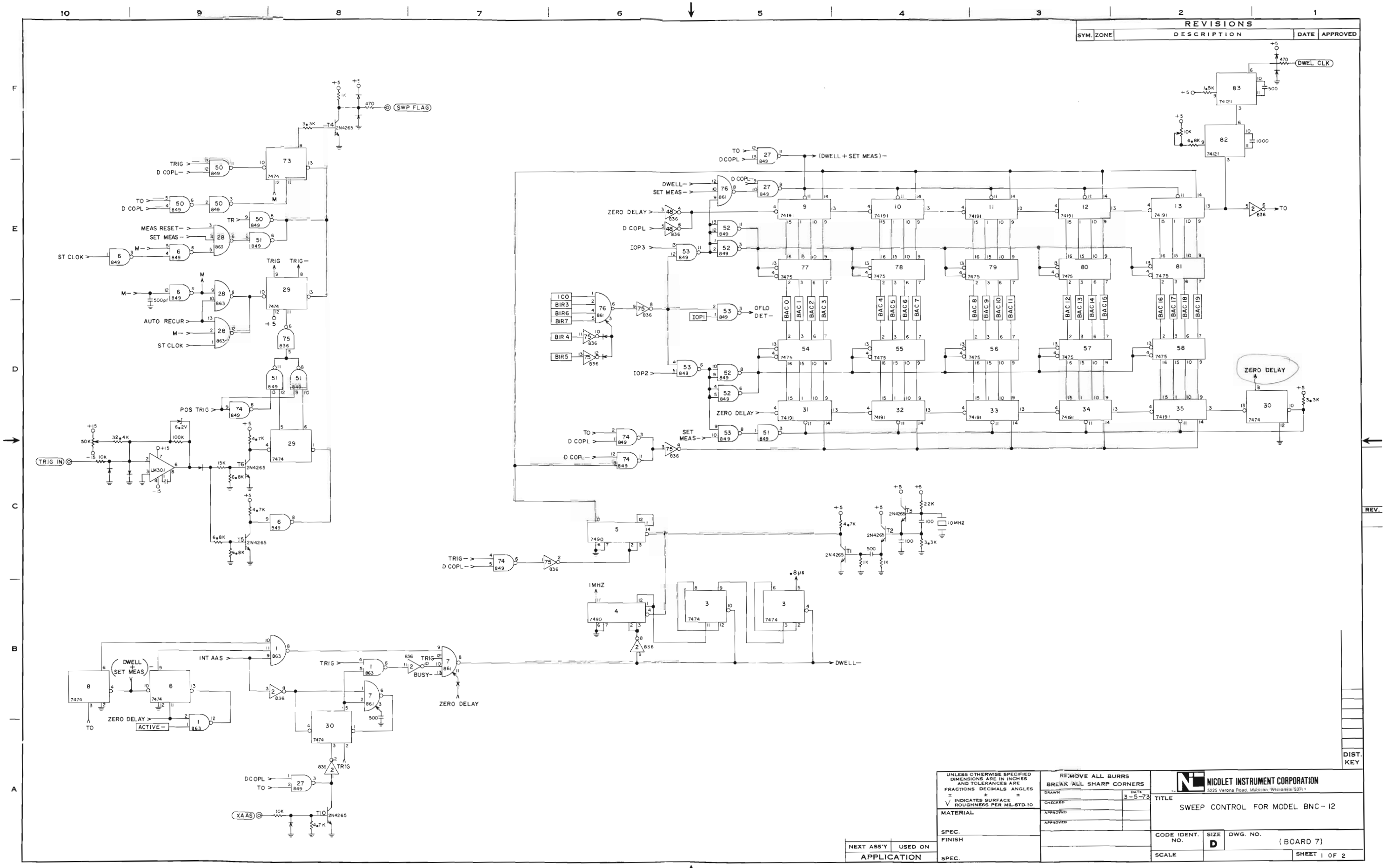
REVISIONS
SYM. ZONE DESCRIPTION DATE APPROVED
SWP FLAG
TRIG IN
DWEL CLK
ZERO DELAY
XA AS
INT AAS
ACTIVE –
(DWELL + SET MEAS) –
DWELL –
TO
IMHZ
10MHZ
OFLO DET –
BUSY –
UNLESS OTHERWISE SPECIFIED DIMENSIONS ARE IN INCHES AND TOLERANCES ARE
FRACTIONS DECIMALS ANGLES
REMOVE ALL BURRS
BREAK ALL SHARP CORNERS
DRAWN
CHECKED
APPROVED
MATERIAL
SPEC.
FINISH
NEXT ASS'Y USED ON
APPLICATION
NICOLET INSTRUMENT CORPORATION
5225 Verona Road, Madison, Wisconsin 53711
TITLE
SWEEP CONTROL FOR MODEL BNC-12
CODE IDENT. NO.
SIZE D
DWG. NO.
(BOARD 7)
SCALE
SHEET 1 OF 2
DIST.
KEY
REV.

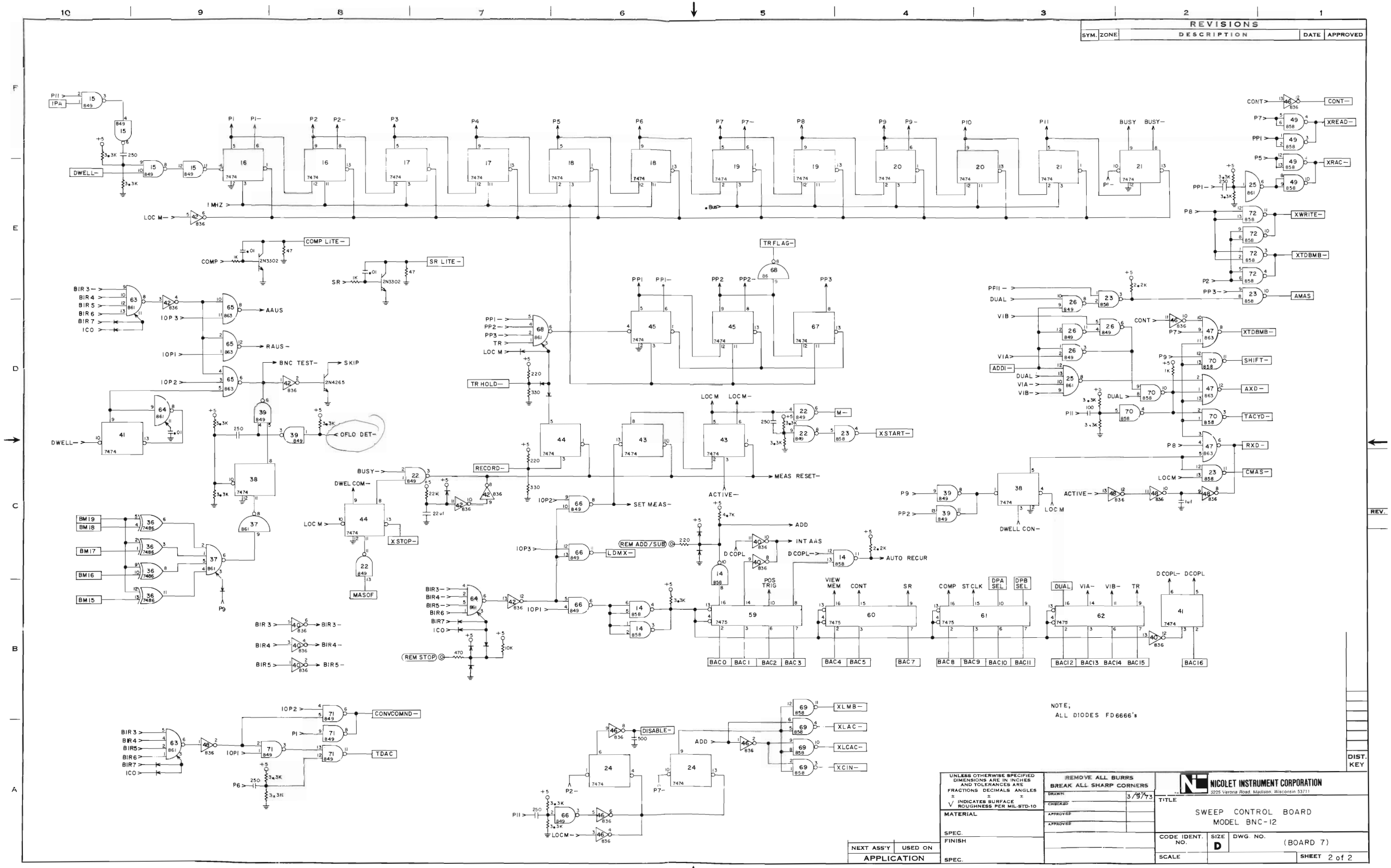
REVISIONS
SYM. ZONE DESCRIPTION DATE APPROVED
NOTE;
ALL DIODES FD6666's
UNLESS OTHERWISE SPECIFIED DIMENSIONS ARE IN INCHES AND TOLERANCES ARE FRACTIONS DECIMALS ANGLES
INDICATES SURFACE ROUGHNESS PER MIL-STD-10
MATERIAL
SPEC.
FINISH
SPEC.
NEXT ASS'Y
USED ON
APPLICATION
REMOVE ALL BURRS
BREAK ALL SHARP CORNERS
DRAWN
CHECKED
APPROVED
APPROVED
3/19/73
NICOLET INSTRUMENT CORPORATION
3225 Verona Road, Madison, Wisconsin 53711
TITLE
SWEEP CONTROL BOARD
MODEL BNC-12
CODE IDENT. NO.
SIZE D
DWG. NO. (BOARD 7)
SCALE
SHEET 2 of 2
DIST. KEY
REV.

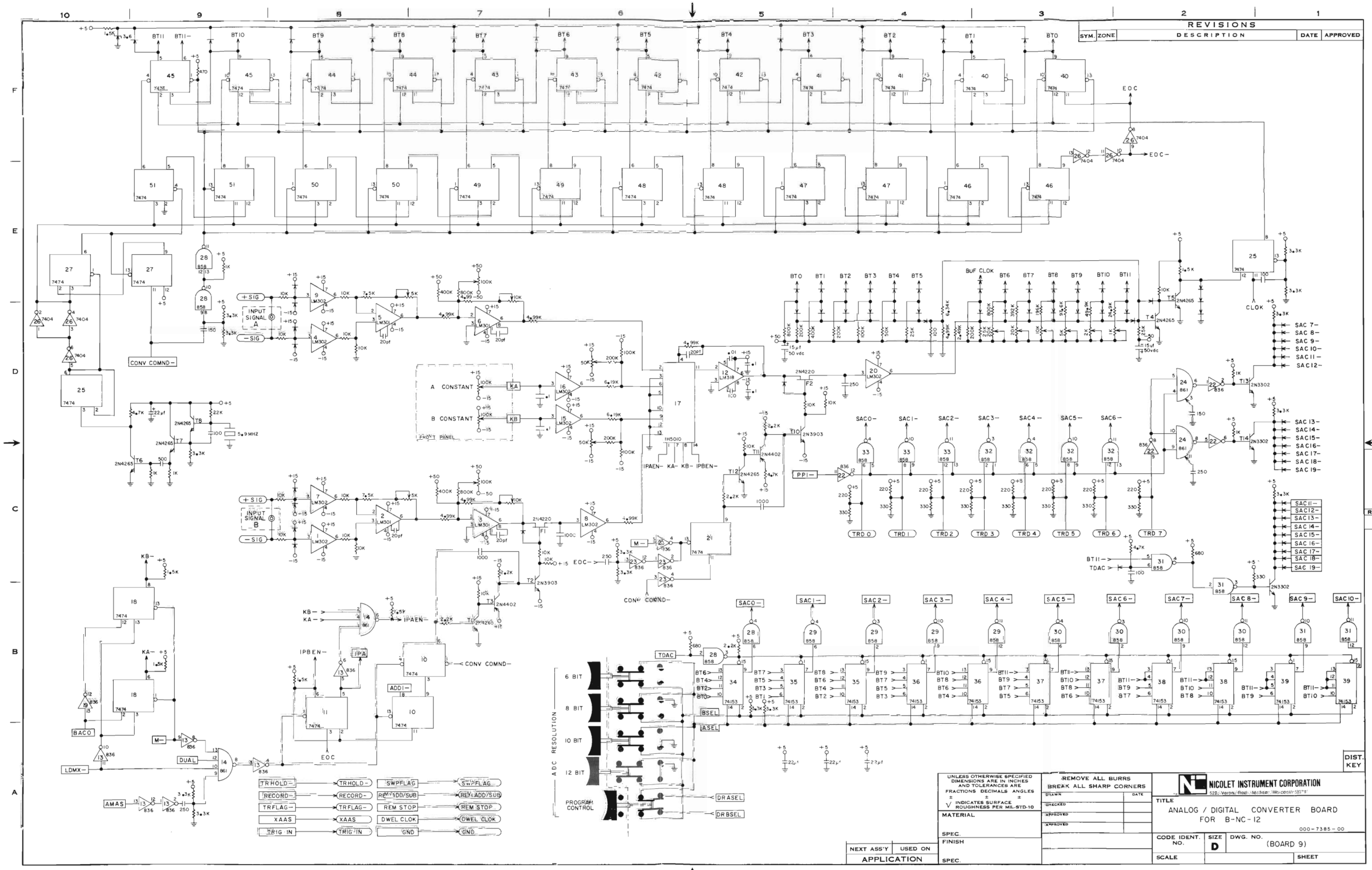
REVISIONS
SYM. ZONE DESCRIPTION DATE APPROVED
INPUT SIGNAL A
INPUT SIGNAL B
+SIG
−SIG
A CONSTANT
B CONSTANT
FRONT PANEL
CONV COMND−
EOC
EOC−
PPI−
TDAC
BUF CLOK
CLOK
BACO
LDMX−
DUAL
AMAS
TRHOLD−
RECORD−
TRFLAG−
XAAS
TRIG IN
SWPFLAG
REM ADD/SUB
REM STOP
DWEL CLOK
GND
ADC RESOLUTION
6 BIT
8 BIT
10 BIT
12 BIT
PROGRAM CONTROL
DRASEL
DRBSEL
BSEL
ASEL
DIST. KEY
REV.
UNLESS OTHERWISE SPECIFIED DIMENSIONS ARE IN INCHES AND TOLERANCES ARE FRACTIONS DECIMALS ANGLES ± ± ± INDICATES SURFACE ROUGHNESS PER MIL-STD-10
MATERIAL
SPEC.
FINISH
SPEC.
NEXT ASS'Y USED ON
APPLICATION
REMOVE ALL BURRS BREAK ALL SHARP CORNERS
DRAWN DATE
CHECKED
APPROVED
APPROVED
NICOLET INSTRUMENT CORPORATION
525 Verona Road Madison Wisconsin 53711
TITLE
ANALOG / DIGITAL CONVERTER BOARD FOR B-NC-12
000-7385-00
CODE IDENT. NO.
SIZE D
DWG. NO. (BOARD 9)
SCALE
SHEET

REVISIONS				
SYM.	ZONE	DESCRIPTION	DATE	APPROVED

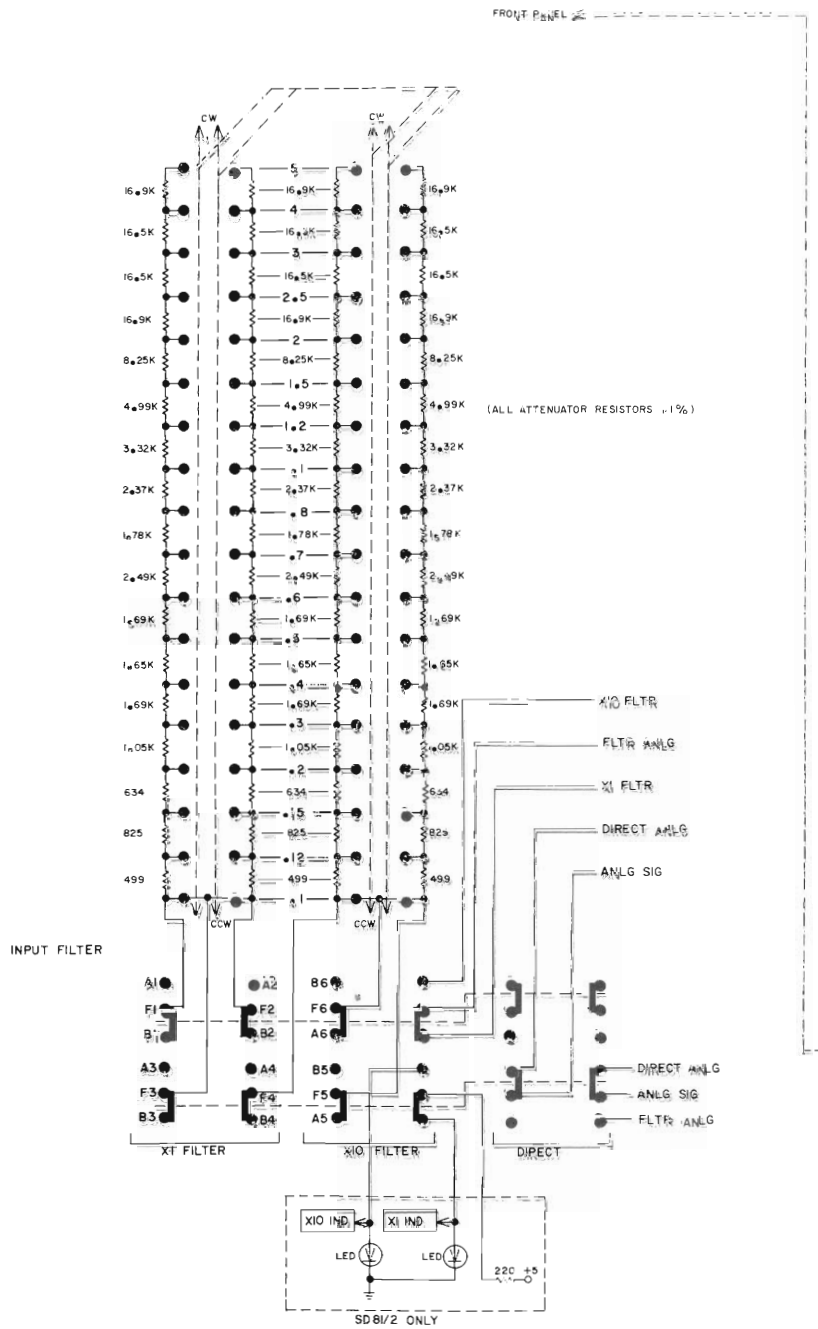

NOTE:
X1 AND X10 SWITCHES ARE LOCATED ON THIS BOARD FOR MODEL SD81/2 AND DIRECT SWITCH IS LOCATED ON FRONT PANEL

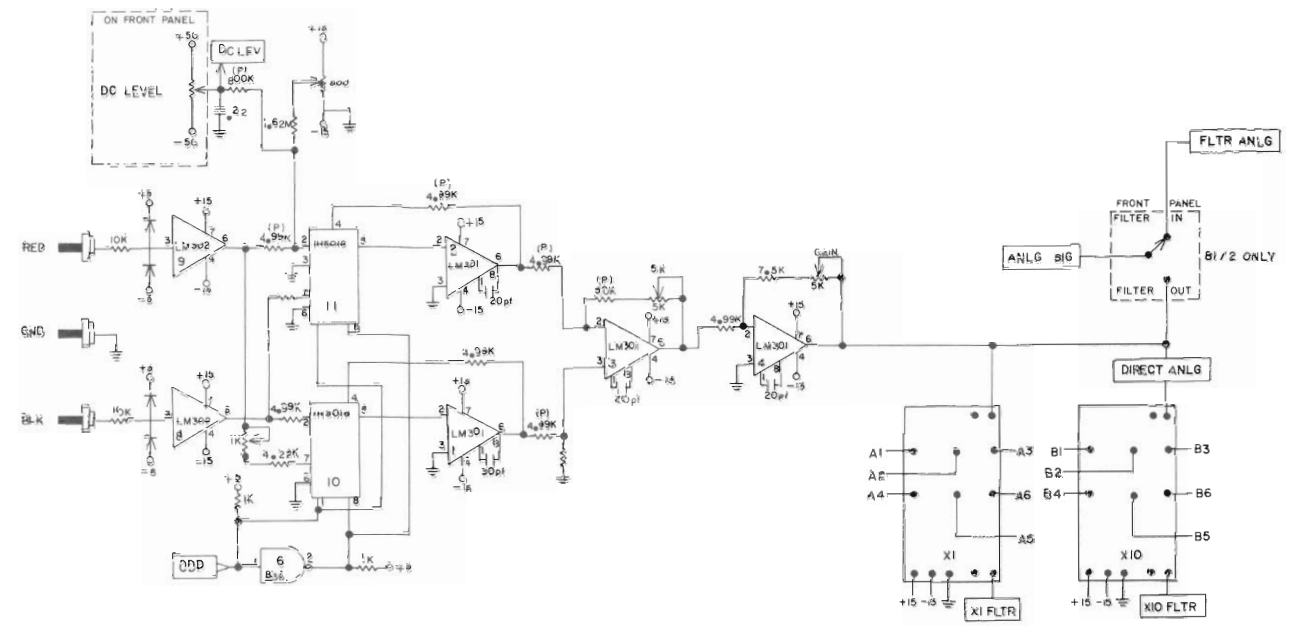

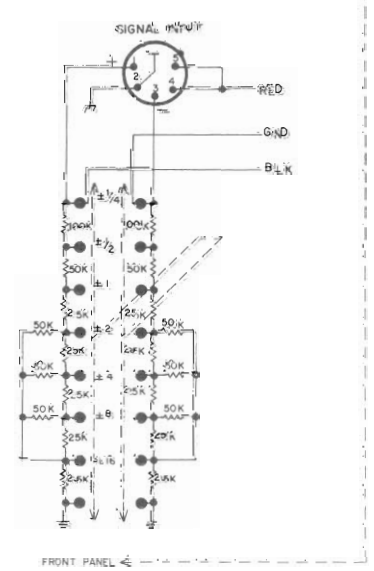

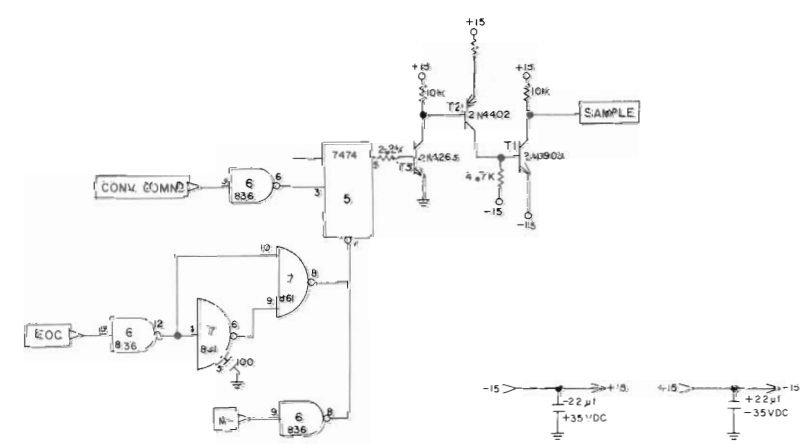

SIGNAL	CONNECTOR PIN	D to	H to
GND	1		
+5	3		
−5	5		
	7		
F2	9	FPA-2	FPA-19
F3	11	FPA-3	FPA-18
	13		
F6	15	FPB-3	FPB-18
	17		
	19		
FLTR ANLG	21	FPC-8	FPC-14
X10IND	23	FPC-1	FPC-20
F4	25	FPB-1	FPB-20
F5	27	FPB-2	FPB-19
X1IND	29	FPC-2	FPC-19
	31		
	33		
	35		
	37		
GND	39		
	41		
	43		
	45		
	47		
	49		
	51		
ODD−	53	J-37	J-37
	55		
	57		
	59		
	61		
	63		
	65		
HQ GND	67		
+15	69		
−15	71		
	73		
−50	75		
	77		
+50	79		

GND	2		
+5	4		
−5	6		
DIR ANLG	8	FPB-8	FPB-14
	10		
	12		
	14		
F1	16	FPA-1	FPA-20
	18		
	20		
	22		
	24		
	26		
	28		
	30		
	32		
	34		
DC LEV	36	FPA-9	FPA-12
	38		
GND	40		
	42		
EOC−	44	See note 2	
M−	46	See note 3	
	48		
CONV COMND	50	See note 1	
	52		
SAMPLE	54	L-65	
	56		
	58		
	60		
	62		
	64		
	66		
HQ GND	68		
+15	70		
−15	72		
	74		
−50	76		
	78		
+50	80		

Notes:
1. F-50, L-37, J-7
2. F-18, L-42
3. F-18, J-10, A-19

REV.

DIST KEY

UNLESS OTHERWISE SPECIFIED DIMENSIONS ARE IN INCHES AND TOLERANCES ARE FRACTIONS ± DECIMALS ± ANGLES ±
√ INDICATES SURFACE SMOOTHNESS PER MIL-STD-10
MATERIAL
SPEC.
FINISH
SPEC.

REMOVE ALL BURRS
BREAK ALL SHARP CORNERS

		DATE
DRAWN		
CHECKED		
APPROVED		
APPROVED		

NICOLET INSTRUMENT CORPORATION
5225 Veg na Road, Madison, Wisconsin 53711

TITLE
ANALOG BOARD (D)

CODE IDENT. NO.
SIZE D
DWG. NO.
SCALE:
SHEET

NEXT ASS'Y | USED ON
APPLICATION

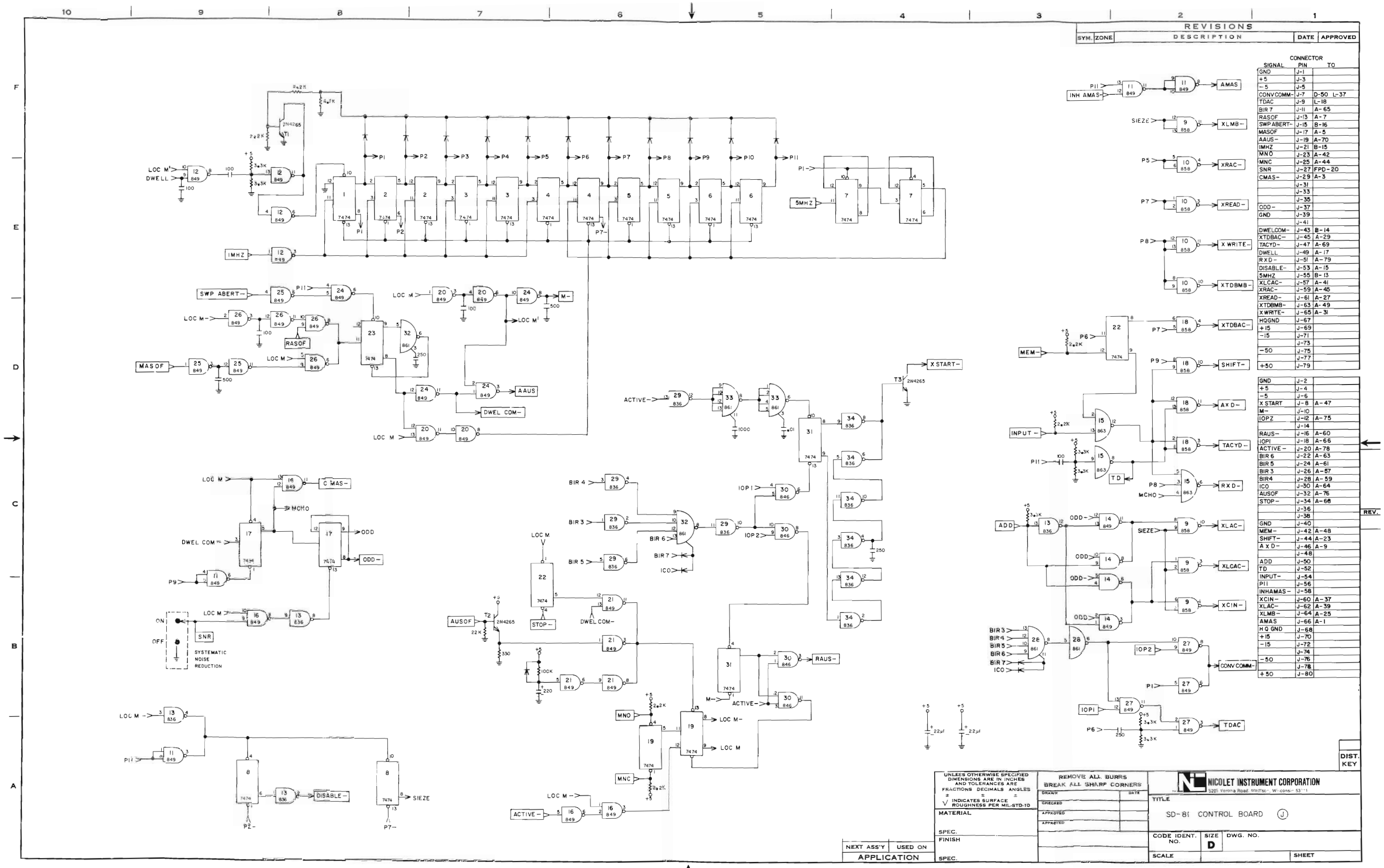

SIGNAL	CONNECTOR PIN	TO
GND	J-1	
+5	J-3	
-5	J-5	
CONVCOMM-	J-7	D-50 L-37
TDAC	J-9	L-18
BIR 7	J-11	A-65
RASOF	J-13	A-7
SWP ABERT-	J-15	B-16
MASOF	J-17	A-5
AAUS-	J-19	A-70
IMHZ	J-21	B-15
MNO	J-23	A-42
MNC	J-25	A-44
SNR	J-27	FPD-20
CMAS-	J-29	A-3
	J-31	
	J-33	
	J-35	
ODD-	J-37	
GND	J-39	
	J-41	
DWELCOM-	J-43	B-14
XTDBAC-	J-45	A-29
TACYD-	J-47	A-69
DWELL	J-49	A-17
RXD-	J-51	A-79
DISABLE-	J-53	A-15
5MHZ	J-55	B-13
XLCAC-	J-57	A-41
XRAC-	J-59	A-45
XREAD-	J-61	A-27
XTDBMB-	J-63	A-49
XWRITE-	J-65	A-31
HGGND	J-67	
+15	J-69	
-15	J-71	
	J-73	
-50	J-75	
	J-77	
+50	J-79	
GND	J-2	
+5	J-4	
-5	J-6	
X START	J-8	A-47
M-	J-10	
IOPZ	J-12	A-75
	J-14	
RAUS-	J-16	A-60
IOPI	J-18	A-66
ACTIVE-	J-20	A-78
BIR 6	J-22	A-63
BIR 5	J-24	A-61
BIR 3	J-26	A-57
BIR4	J-28	A-59
ICO	J-30	A-64
AUSOF	J-32	A-76
STOP-	J-34	A-68
	J-36	
	J-38	
GND	J-40	
MEM-	J-42	A-48
SHIFT-	J-44	A-23
AXD-	J-46	A-9
	J-48	
ADD	J-50	
TD	J-52	
INPUT-	J-54	
P11	J-56	
INHAMAS-	J-58	
XCIN-	J-60	A-37
XLAC-	J-62	A-39
XLMB-	J-64	A-25
AMAS	J-66	A-1
HG GND	J-68	
+15	J-70	
-15	J-72	
	J-74	
-50	J-76	
	J-78	
+50	J-80	

REV.

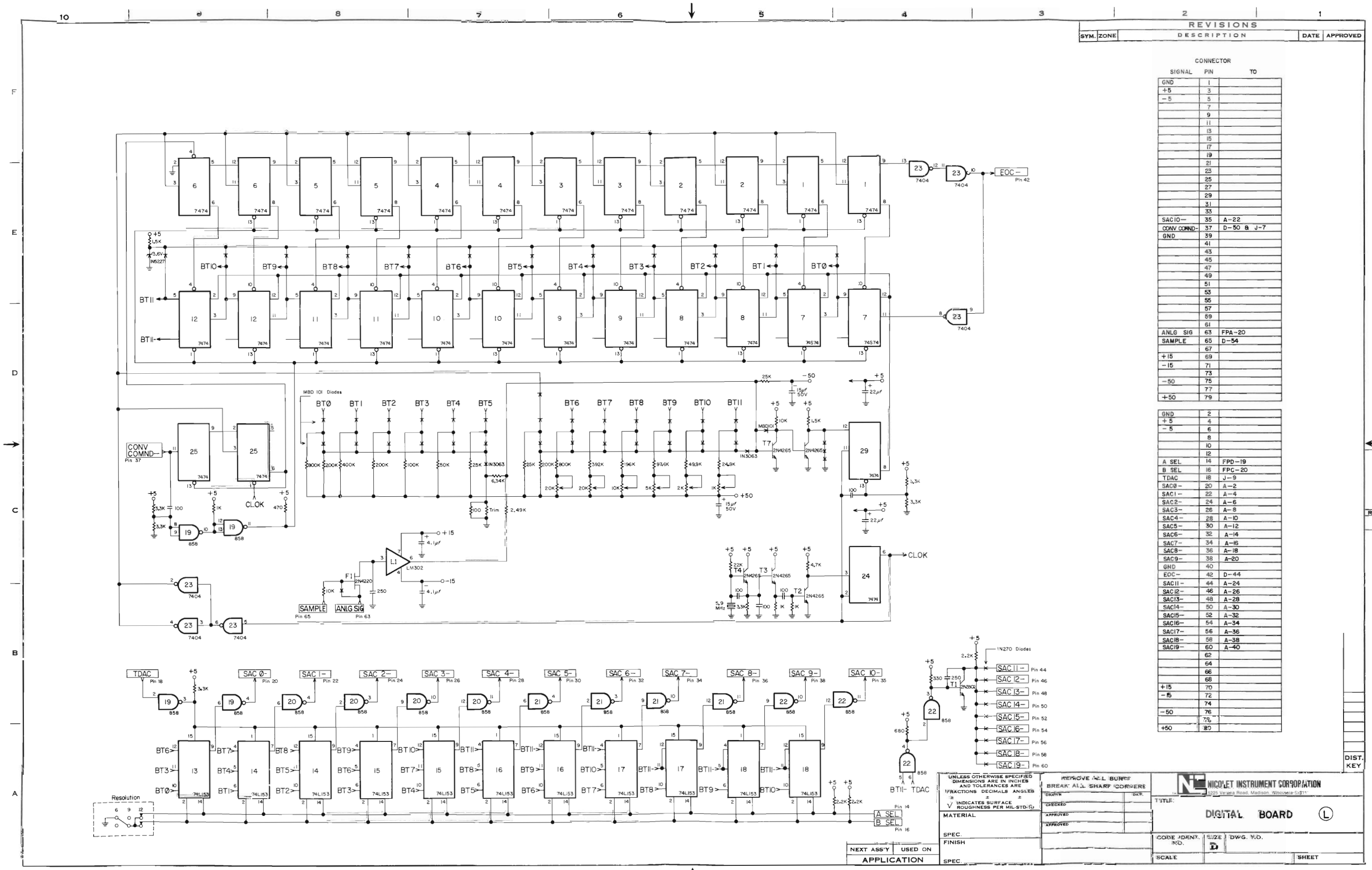
REVISIONS
SYM. ZONE DESCRIPTION DATE APPROVED
CONNECTOR
SIGNAL PIN TO
GND 1
+5 3
−5 5
SAC10− 35 A−22
CONV COMND− 37 D−50 & J−7
GND 39
ANLG SIG 63 FPA−20
SAMPLE 65 D−54
+15 69
−15 71
−50 75
+50 79
GND 2
+5 4
−5 6
A SEL 14 FPD−19
B SEL 16 FPC−20
TDAC 18 J−9
SAC0− 20 A−2
SAC1− 22 A−4
SAC2− 24 A−6
SAC3− 26 A−8
SAC4− 28 A−10
SAC5− 30 A−12
SAC6− 32 A−14
SAC7− 34 A−16
SAC8− 36 A−18
SAC9− 38 A−20
GND 40
EOC− 42 D−44
SAC11− 44 A−24
SAC12− 46 A−26
SAC13− 48 A−28
SAC14− 50 A−30
SAC15− 52 A−32
SAC16− 54 A−34
SAC17− 56 A−36
SAC18− 58 A−38
SAC19− 60 A−40
+15 70
−15 72
−50 76
+50 80
EOC−
Pin 42
CONV COMND−
Pin 37
CLOK
SAMPLE
Pin 65
ANLG SIG
Pin 63
MBD 101 Diodes
1N270 Diodes
Resolution
A SEL
B SEL
Pin 14
Pin 16
BT11− TDAC
NEXT ASS'Y USED ON
APPLICATION
UNLESS OTHERWISE SPECIFIED DIMENSIONS ARE IN INCHES AND TOLERANCES ARE FRACTIONS ± DECIMALS ± ANGLES ±
INDICATES SURFACE ROUGHNESS PER MIL-STD-Ω
MATERIAL
SPEC.
FINISH
SPEC.
REMOVE ALL BURRS BREAK ALL SHARP CORNERS
DRAWN DATE
CHECKED
APPROVED
APPROVED
NICOLET INSTRUMENT CORPORATION
5225 Verona Road, Madison, Wisconsin 53711
TITLE
DIGITAL BOARD
L
CODE IDENT. NO.
SIZE D
DWG. NO.
SCALE
SHEET
REV.
DIST. KEY

REVISIONS				
SYM.	ZONE	DESCRIPTION	DATE	APPROVED

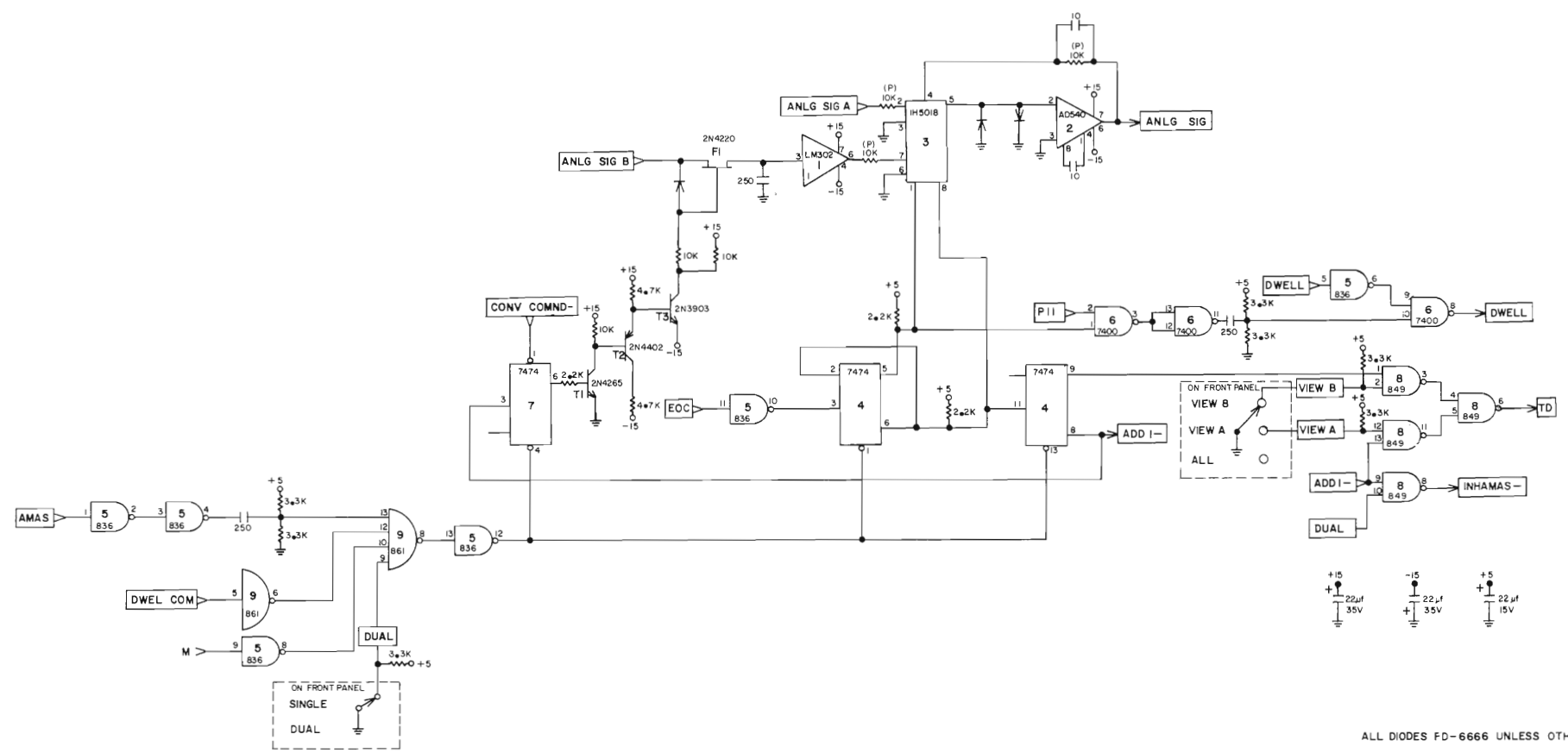

ALL DIODES FD-6666 UNLESS OTHERWISE SPECIFIED

CONNECTOR

SIGNAL	PIN	TO
GND	F-1	
+5	F-3	
	F-5	
	F-7	
	F-9	
	F-11	
	F-13	
	F-15	
	F-17	
	F-19	
	F-21	
	F-23	
	F-25	
	F-27	
	F-29	
	F-31	
	F-33	
	F-35	
	F-37	
GND	F-39	
	F-41	
	F-43	
	F-45	
	F-47	
	F-49	
	F-51	
	F-53	
	F-55	
	F-57	
	F-59	
	F-61	
	F-63	
	F-65	
	F-67	
+15	F-69	
-15	F-71	
	F-73	
	F-75	
	F-77	
	F-79	

GND	F-2	
+5	F-4	
	F-6	
P11	F-8	J-56
DWELL	F-10	J-49
DWELL	F-12	A-17
AMAS	F-14	J-66
DWELL COM	F-16	J-43 B-14
M-	F-18	D-46 J-10 A-19
DUAL	F-20	FPA-4
	F-22	
EOC-	F-24	D-44 L-42
VIEW B	F-26	FPB-11
TD	F-28	J-52
	F-30	
	F-32	
	F-34	
	F-36	
	F-38	
GND	F-40	
INHAMAS-	F-42	J-58
ADD I-	F-44	A-72
VIEW A	F-46	FPA-11
ANLGSIG A	F-48	
CONVCOMND-	F-50	L-37 J-7 D-50
	F-52	
	F-54	
ANLG SIG	F-56	L-63
ANLG SIG B	F-58	FPA-14
	F-60	
	F-62	
	F-64	
	F-66	
	F-68	
+15	F-70	
-15	F-72	
	F-74	
	F-76	
	F-78	
	F-80	

REV.

DIST. KEY

NEXT ASS'Y	USED ON
APPLICATION	

UNLESS OTHERWISE SPECIFIED DIMENSIONS ARE IN INCHES AND TOLERANCES ARE
FRACTIONS ± DECIMALS ± ANGLES ±
√ INDICATES SURFACE ROUGHNESS PER MIL-STD-10

MATERIAL
SPEC.
FINISH
SPEC.

REMOVE ALL BURRS
BREAK ALL SHARP CORNERS

	DRAWN	DATE
	CHECKED	
	APPROVED	
	APPROVED	

NICOLET INSTRUMENT CORPORATION
5225 Verona Road, Madison, Wisconsin 53711

TITLE
SD 81/2 MULTIPLEXER
BOARD LOCATION "F"

CODE IDENT. NO.	SIZE	DWG. NO.
	D	
SCALE		SHEET

REVISIONS				
SYM.	ZONE	DESCRIPTION	DATE	APPROVED

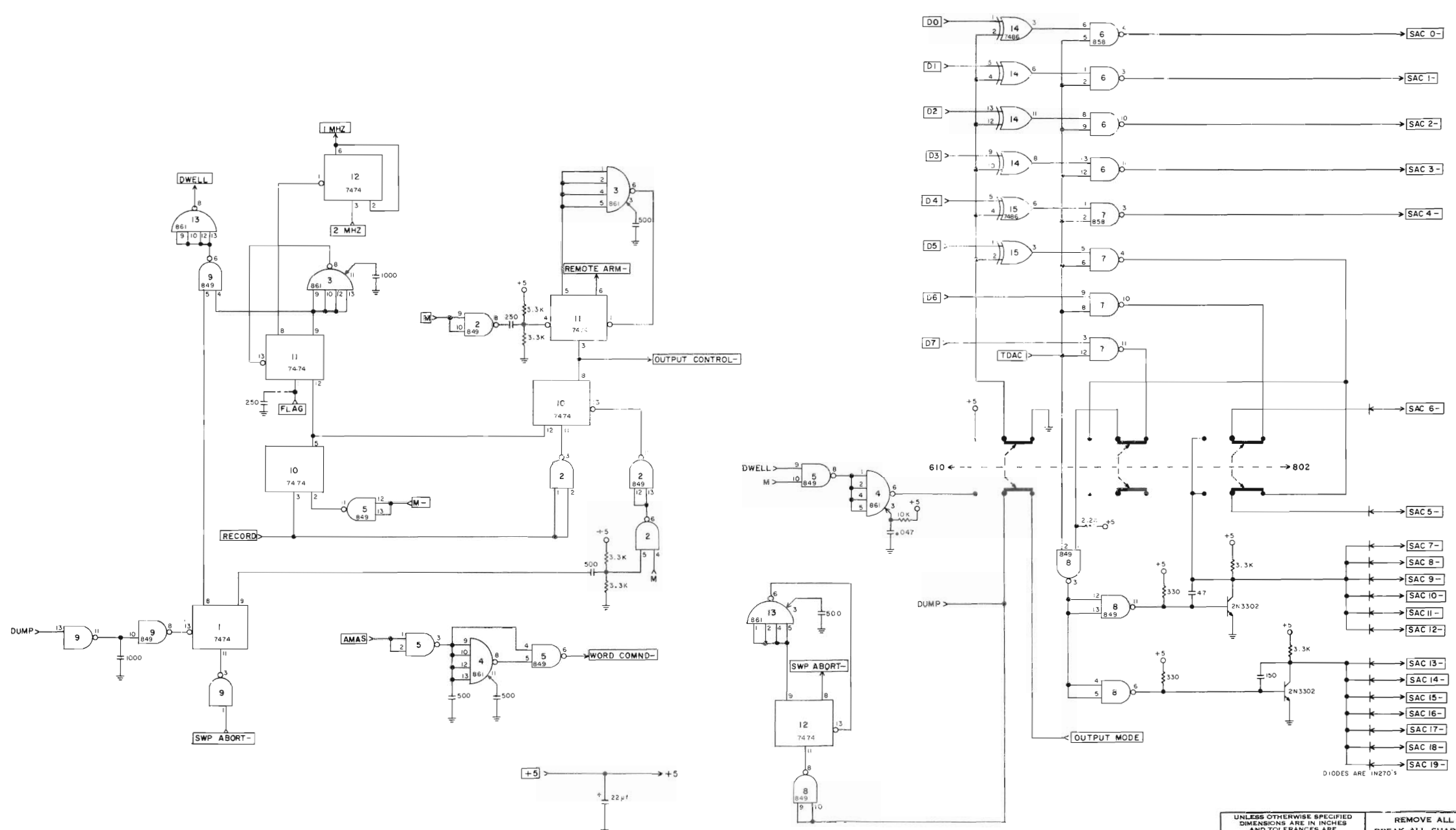

NOTE;
SEE S-29 FOR CONTROL LOGIC

DIST. KEY

UNLESS OTHERWISE SPECIFIED DIMENSIONS ARE IN INCHES AND TOLERANCES ARE
FRACTIONS ± DECIMALS ± ANGLES ±
√ INDICATES SURFACE ROUGHNESS PER MIL-STD-10

MATERIAL
SPEC.
FINISH
SPEC.

REMOVE ALL BURRS
BREAK ALL SHARP CORNERS

		DATE
DRAWN		
CHECKED		
APPROVED		
APPROVED		

NICOLET INSTRUMENT CORPORATION
5225 Verona Road, Madison, Wisconsin 53711

TITLE
1080/BIOMATION TRANSIENT RECORDER
INTERFACE FOR SD-88

NEXT ASS'Y	USED ON
APPLICATION	

CODE IDENT. NO.	SIZE	DWG. NO.
	D	
SCALE		SHEET

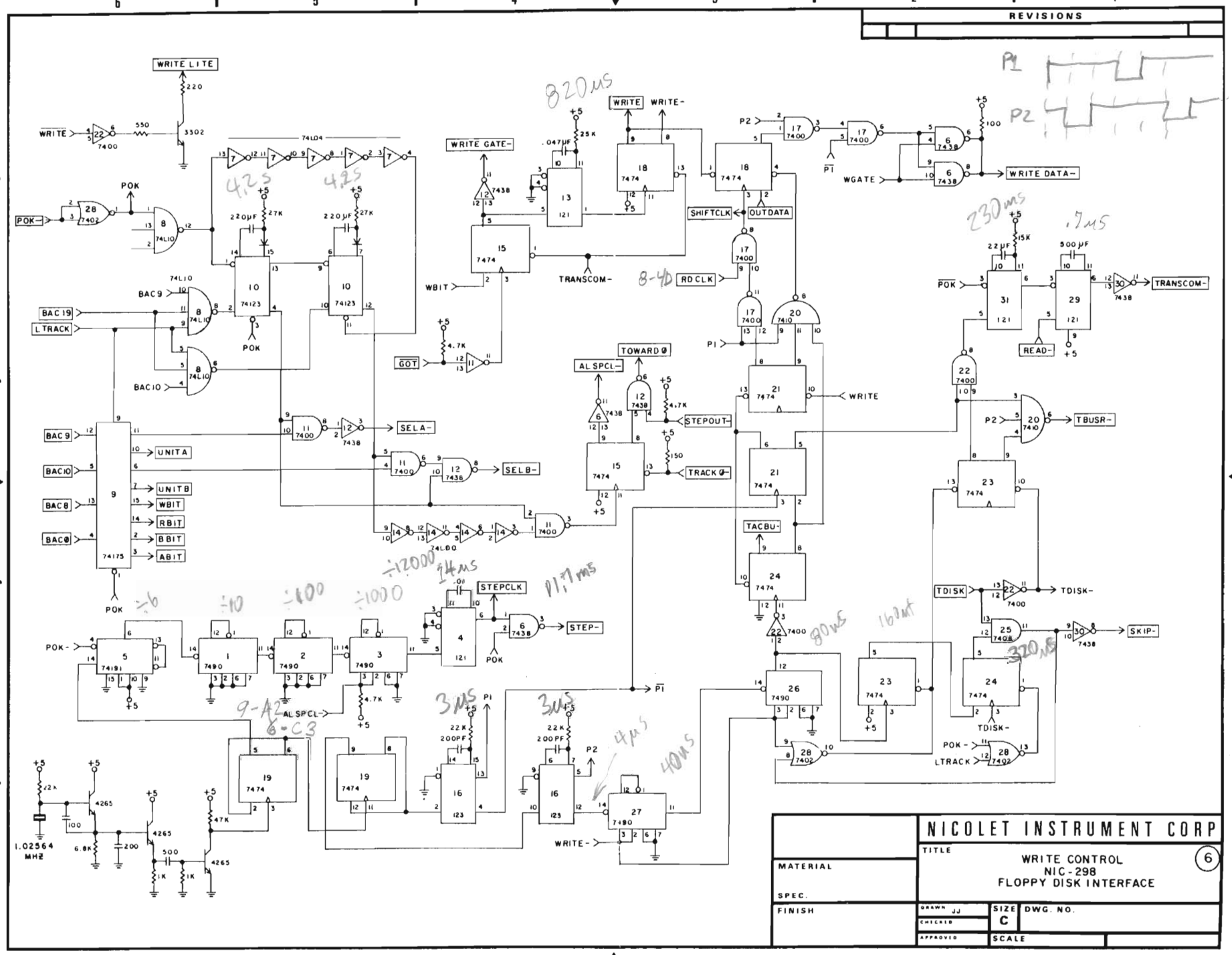
REVISIONS
WRITE LITE
WRITE
POK-
POK
BAC19
L TRACK
BAC9
BAC10
BAC8
BAC0
UNITA
UNITB
WBIT
RBIT
BBIT
ABIT
SELA-
SELB-
WRITE GATE-
GOT
WBIT
TRANSCOM-
WRITE
WRITE-
SHIFTCLK
OUTDATA
RDCLK
TOWARD Ø
AL SPCL-
STEPOUT-
TRACK Ø-
TACBU-
STEPCLK
STEP-
WGATE
WRITE DATA-
READ-
TBUSR-
TDISK
TDISK-
SKIP-
1.02564 MHZ
820 ms
230 ms
.7 ms
4.25
4.25
÷6
÷10
÷100
÷1000
÷12000
14 ms
11.7 ms
9-A2
6-C3
3 ms
3 ms
4 µs
40 ms
80 ms
160 ms
320 ms
NICOLET INSTRUMENT CORP
TITLE
WRITE CONTROL
NIC-298
FLOPPY DISK INTERFACE
6
MATERIAL
SPEC.
FINISH
DRAWN JJ
CHECKED
APPROVED
SIZE C
DWG. NO.
SCALE

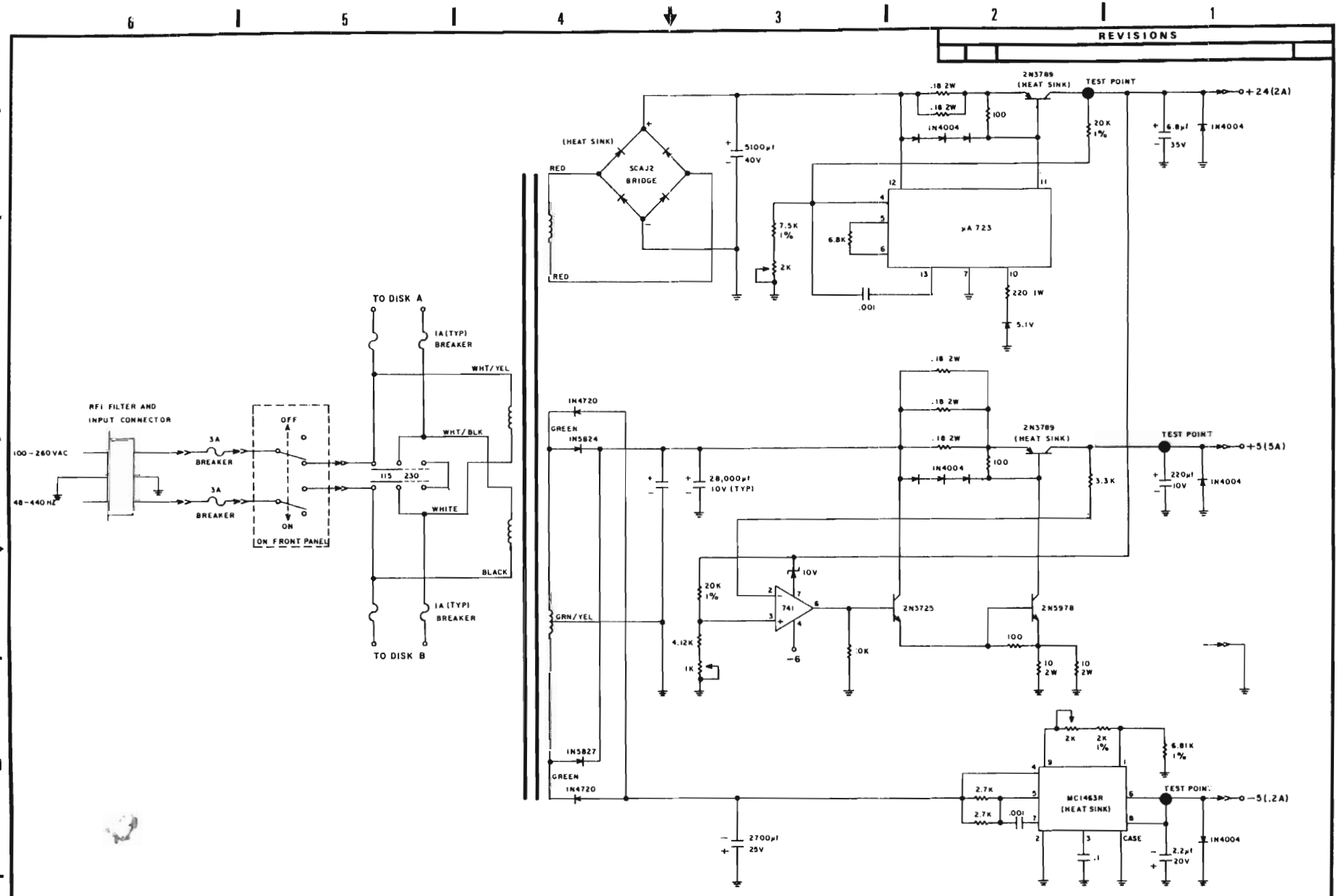

vert AC6-AC19 Y Horz AC10-AC13 Zero
AC0-AC9 data X

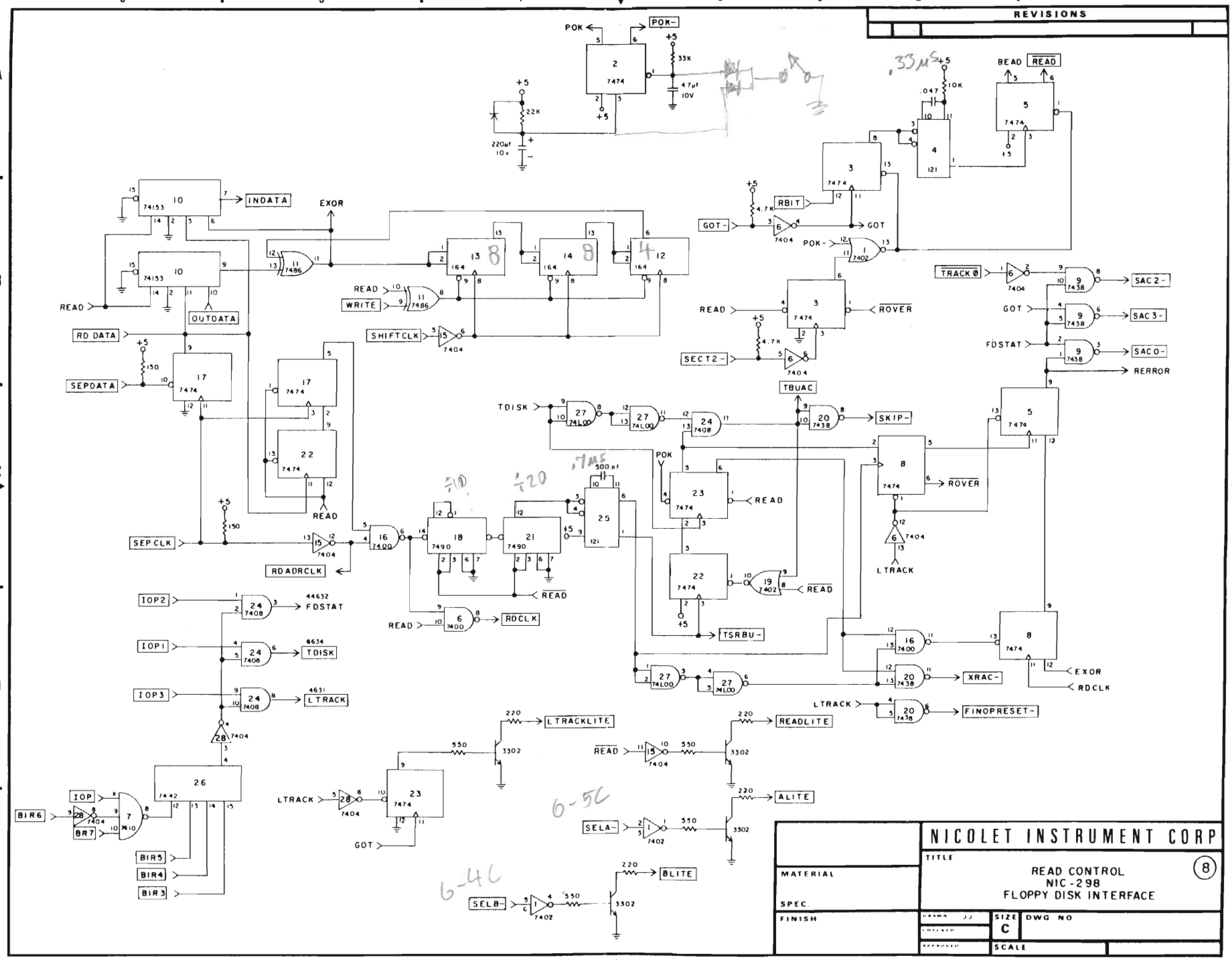
REVISIONS
NICOLET INSTRUMENT CORP
TITLE
READ CONTROL
NIC-298
FLOPPY DISK INTERFACE
8
MATERIAL
SPEC
FINISH
SIZE
C
DWG NO
SCALE
POK
POK-
INDATA
EXOR
OUTDATA
READ
RD DATA
SEPDATA
SEPCLK
RDADRCLK
WRITE
SHIFTCLK
GOT-
GOT
RBIT
POK-
ROVER
SECT2-
TRACK0
SAC2-
SAC3-
SACO-
FDSTAT
RERROR
TBUAC
TDISK
SKIP-
TSRBU-
LTRACK
XRAC-
FINOPRESET-
RDCLK
IOP2
IOP1
IOP3
IOP
BIR6
BIR7
BIR5
BIR4
BIR3
LTRACKLITE
READLITE
ALITE
BLITE
SELA-
SELB-

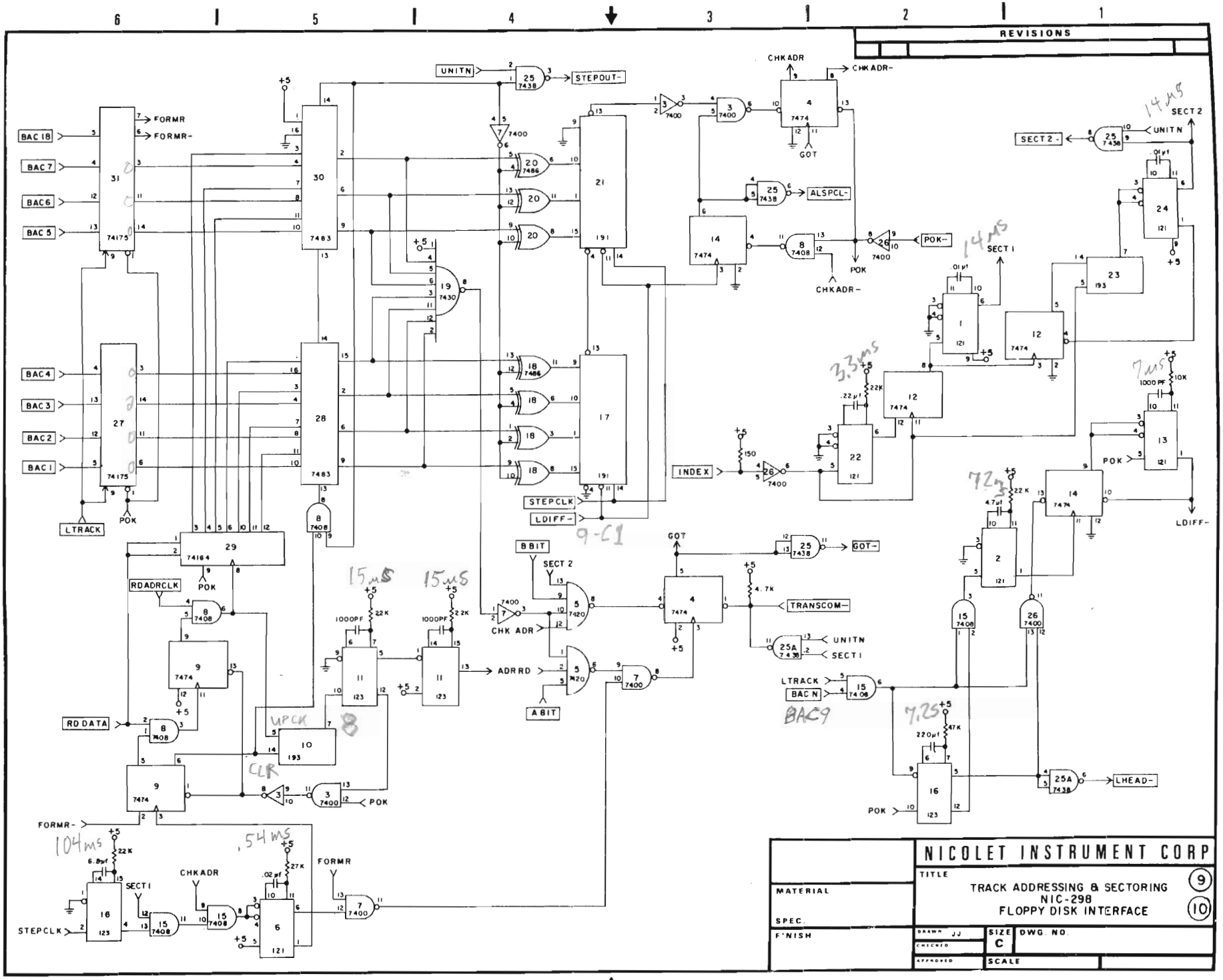
REVISIONS
NICOLET INSTRUMENT CORP
TITLE
TRACK ADDRESSING & SECTORING
NIC-298
FLOPPY DISK INTERFACE
9
10
MATERIAL
SPEC.
FINISH
DRAWN JJ
CHECKED
APPROVED
SIZE C
DWG. NO.
SCALE
BAC 18
BAC 7
BAC 6
BAC 5
BAC 4
BAC 3
BAC 2
BAC 1
LTRACK
POK
RDADRCLK
RD DATA
FORMR-
STEPCLK
UNITN
STEPOUT-
FORMR
CHKADR
CHKADR-
GOT
ALSPCL-
POK-
INDEX
LDIFF-
BBIT
SECT 2
CHK ADR
ADRRD
ABIT
GOT-
TRANSCOM-
SECT 1
BAC N
LHEAD-
SECT 2-
UPCK
CLR
14 μS
SECT 2
SECT 1
3.3 μS
7 μS
9-C1
15 μS
15 μS
72 μS
8
7.25
BAC9
104 ms
.54 ms
166.7 ms Index
5.20 sector
39 μs each