SPC-16/40, SPC-16/45, SPC-16/60 SPC-16/65 SPC-16/80, SPC-16/85 system installation and physical planning

88A00263A-A

SPC-16/40, SPC-16/45
SPC-16/60, SPC-16/65
SPC-16/80, SPC-16/85
system installation and physical planning

GENERAL AUTOMATION, INC.
1055 East Street
Anaheim, California 92805
(714) 778-4800

GENERAL AUTOMATION, INC.

88A00263A-A

REVISION

Symbol	Description	Approval	Publications	Date
A	Original Issue			7-73

CONTENTS

CONTENTS (continued)

CONTENTS (continued)

SECTION 1
INTRODUCTION

The General Automation SPC-16 Automation Computers are a family of fast, unusually powerful minicomputers. They offer their users application programming efficiency and versatility usually found only in much larger computers.

In addition to the SPC-16 computer, General Automation offers a wide selection of peripheral units and controllers and a variety of system software packages, the combination of which form a computer system that outperforms all similarly priced systems on the market.

Many factors are important in ensuring that the SPC-16 system is used to its fullest potential, but one of the most important factors is the thoroughness applied to the installation procedure. The installation procedure involves site planning and preparation before the system is received, carries through unpacking the equipment, positioning and mounting the elements of the system and interconnecting each unit, and ends when the operational integrity of the assembled system has been completely verified.

The General Automation Field Service Engineer in charge will direct all phases of the installation procedure. His duties include:

a. Inspecting the site prior to arrival of the equipment.

b. Inspecting and unpacking equipment upon its arrival.

c. Positioning the equipment, inter-cabling and checking the customer's power availability.

d. Turning on power and preliminary testing.

e. Ensuring that all documentation, software and manuals are available.

f. Running the General Automation Test and Verify diagnostics and the peripheral checkout acceptance tests.

g. Determining when the hardware is operating properly and the SPC-16 system is ready for the customer's software.

h. Providing an orientational description to the customer as to the features of his newly-acquired SPC-16 system as well as discussion periodic maintenance procedures, fuse locations and similarly applicable topics.

i. Maintaining operational control of the system while reviewing each step of the procedure with the customer and obtaining signed acknowledgement from the customer that all routines and services have been performed.

This manual is intended to be used as a guide to the installation of any SPC-16/40/60/80 or SPC-16/45/65/85 system. The discussion is organized to parallel actual portions of the installation procedure:

- Section 2 describes pre-installation planning and site preparation.
- Section 3 describes the procedure for unpacking the system.
- System 4 describes the assembling, mounting and cabling procedures.
- Section 5 describes system verification procedures.

SECTION 2
PRE-INSTALLATION PLANNING

Several factors are important in planning the installation of a computer system. The planner must be aware of the site construction requirements that are necessary to ensure the safest and most efficient operating environment for the system. Further, the planner must know the power requirements in order to ensure that adequate power is available at installation time. He must also know the physical dimensions of the system so that the proper space can be allocated before the installation procedure begins. Finally, he must know the lengths of cabling required in order to plan the placement of the system's various elements.

This section contains information on each of the above factors. Section 2.1 covers site preparation. Section 2.2 covers power requirements. Section 2.3 covers physical space considerations.

Users who wish to interface their own controller boards or peripheral units to the SPC-16 system are provided pertinent information in Appendix A.

2.1 SITE PREPARATION

The planner must ensure that the proposed site is suitable to accept installation of the system.

2.1.1 Building Requirements

An important factor to be considered in planning an SPC-16 system installation is safety. This consideration is reflected in the choice of a suitable location, building materials, lighting, air conditioning, electrical systems, personnel training and fire prevention equipment.

FIRE PREVENTION EQUIPMENT

The installation room should be equipped with at least one 15-pound portable carbon dioxide fire extinguisher for use against electrical fires. It is advisable to locate a standpipe or hose unit within effective range of the computer as a secondary extinguishing agent for Class A Hazard.

FLOOR CONSTRUCTION

Size and weight of individual units in an SPC-16 system are such that floor and structural member load ratings of most office and plant-type buildings are not exceeded when recommended unit service clearances are maintained. The weight of each unit is listed in Table 2-3.

ROOM CONSTRUCTION

Normal office-type construction is adequate for SPC-16 system installation.

LIGHTING

Good lighting in the computer area is an important factor both in reducing operator fatigue and in enhancing the appearance of the installation. An average illumination of 60-foot candles measured 30-inches above the floor is usually sufficient. Diffused florescent lighting is recommended because it is free of shadow and glare.

SYSTEM GROUNDING

The SPC-16 system is grounded through the AC input lines; usually, therefore no special grounding points need be installed at the installation site. However, if RF problems are anticipated or if the system is to be run with low level analog I/O equipment, special shielding and grounding may be necessary. General Automation Field Service should be consulted in these matters.

2.1.2 Environmental Specifications

This section presents the environmental conditions that are required for proper operation of the SPC-16 system. When a group of units share a common environment, the environmental specifications are determined by the unit having the narrowest range of limits.

OPERATING AND STORAGE TEMPERATURES

Table 2-1 summarizes the allowable temperature and humidity ranges within which each unit of the SPC-16 system may be operated and stored.

COOLING CONSIDERATIONS

The amount of cooling needed in the SPC-16 system's operating environment is a function of the amount of heat generated by the system. Specifically, each watt of power required to operate a unit generates 3.4 BTU's per hour and one ton of air conditioning is required to cool 12,000 BTU's per hour.

Table 2-2 summarizes the amount of heat that is output by each of the standard peripheral units. In addition to these figures, each occupant of the room is estimated to generate 500 BTU's per hour.

Table 2-1. Environmental Specifications Summary

Model Number	Operating Temperature (°C)	Operating Temperature (°F)	Relative Humidity (%)	Non-Operating Temperature (°C)	Non-Operating Temperature (°F)	Relative Humidity (%)
SPC-16 Processor	0-50	32-122	10-90	-20 - +60	-4 - +140	0-95
3314 Card Punch	18-29	65-85	20-65	-32 ⊕ +52	-25 - +125	5-85
3315/3316/3317/3318 Card Reader	0-50	32-122	30-90	-32 - +57	-25 - +135	5-95
3321 Paper Tape Reader	0-55	32-131	10-90	-55 - +85	-67 - +185	0-90
3322 Paper Tape Punch	5-55	40-131	10-90	-55 ⊕ +85	-67 - +185	0-90
3323 Paper Tape Reader &	0-55 (PTR)	32-131	10-90	-55 - +85	-67 - +185	0-90
Paper Tape Punch	5-55 (PTP)	40-131	10-90			
3325 Paper Tape Reader/Punch	5-55	40-131	10-90	-55 - +85	-67 - +185	0-90
3331/332/3333 9-Track MTU	4-32	39-90	15-95	-34 - +60	-30 - +140	15-95
3334/3335/3336 7-Track MTU	4-32	39-90	15-95	-34 - +60	-30 - +140	15-95
3341 Disk Drive	16-32	61-90	10-80	-34 - +66	-30 - +150	5-98
3342 Head per Track Disk	10-35	50-95	0-90	+4 - +60	+40 - +140	0-80
3343 Disk Drive	16-32	61-90	10-80	-34 - +66	-30 - +150	5-98
3346/3347 Disk Drive	10-38	50-100	10-80	-40 - +66	-40 - +150	10-95
3349 'Floppy Disk' Drive	16-38	60-100	20-80	-40 - +60	-40 - +140	0-90
3353 Line Printer	15-26	59-78	40-60	-32 - +52	-25 - +125	5-95
3355/3356/3357/3358 Line Printer &	15-26 (LP)	59-78	40-60	-32 - +52	-25 - +125	5-95
Card Reader	0-50 (CR)	32-122	30-90			
3362/3363 Console Teletype	4-43	39-109	2-95	-40 - +66	-40 - +150	0-90

Table 2-2. Heat Output Summary

Model Number	Running Power (Watts)	Heat Output (BTU/Hr.)
SPC-16 (max. configuration) & Power Supply	917	3118
3314-1000 Card Punch	500	1700
3314-1001 Card Punch	400	1360
3315/3316/3317/3318 Card Reader	450	1530
3321-1000, -1010 Paper Tape Reader	80	270
3321-1020 Paper Tape Reader	400	1360
3323-1000, - 1010 Paper Tape Punch	190	650
3323-1020 Paper Tape Punch	260	880
3323-1000, - 1010 Paper Tape Reader & Punch	270	920
3323-1020 Paper Tape Reader & Punch	660	2240
3325 Paper Tape Reader/Punch	260	880
3331/3332 9-Track MTU	500	1700
3333 9-Track MTU	2000	6800
3334/3335/3336 7-Track MTU	500	1700
3341 Disk Drive	580	1970
3342 Head Per Track Disk	350	1190
3343 Disk Drive	1100	3740
3346/3347 Disk Drive	360	1220
3349 Floppy Disk	60	205
3353 Line Printer	800	2720
3355/3356/3357/3358 Line Printer &	800(LP)	2720
Card Reader	450 (CR)	1530
3362 Console Teletype	110	370
3363 Console Teletype	210	710

2.2 POWER REQUIREMENTS

Sections 2.2.1 and 2.2.2 describe the various AC power sources that should be used to meet the requirements of a particular SPC-16 system. Section 2.2.1 describes the AC power sources for domestic use; Section 2.2.2 describes the AC power sources for European use.

2.2.1 AC Power Sources for Domestic Use

Three different AC power sources are considered for domestic applications:

1. 110 VAC, single-phase, 60 A source
2. 220 VAC, single-phase, 50 A source
3. 208 VAC, three-phase, 50 A source

The 110 VAC, single-phase 60 AMP., source provides 6.6 KW of power and should be used only with small systems that do not include either a 3341 or 3343 disk drive. Figure 2-1 illustrates the power line attachment to the Main AC Power Distribution Panel.

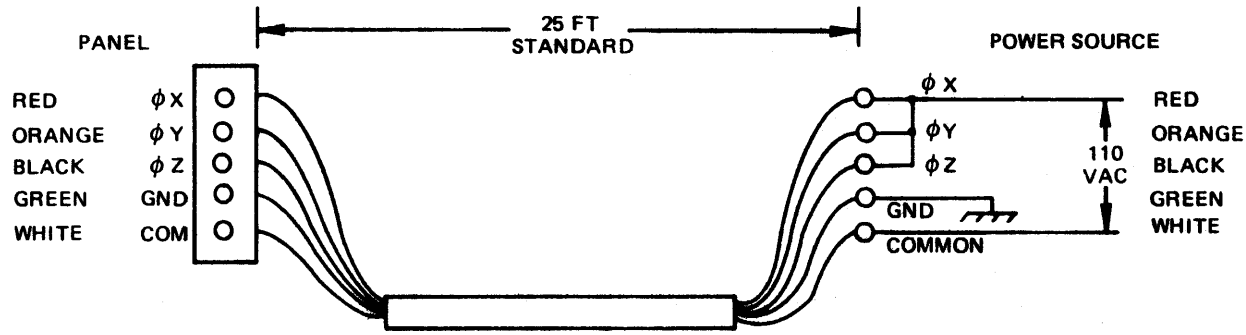

Figure 2-1. Power Line Attachment, 110 VAC Single-Phase 60A

The 220 VAC, single-phase 50 Amp. source provides about 8.8 KW of power and should be used with systems that include only one 3341 or 3343 disk drive. Figure 2-2 illustrates the power line attachment to the Main AC Power Distribution Panel.

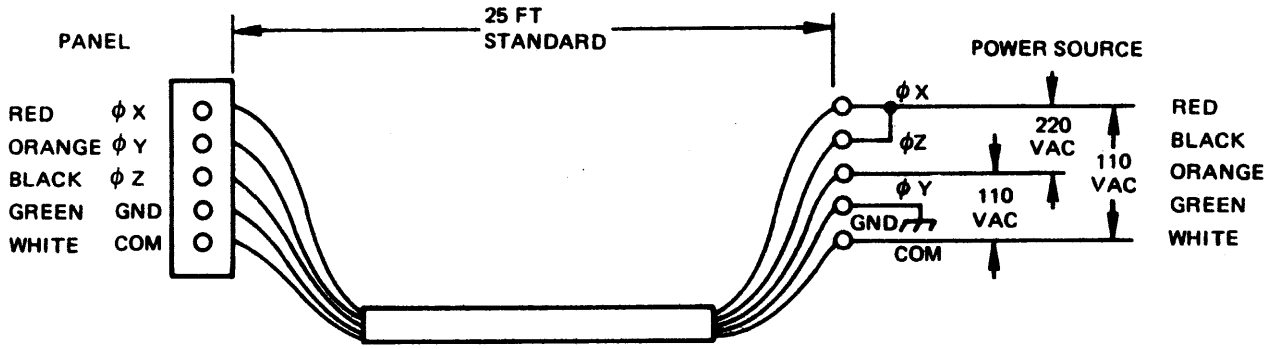

Figure 2-2. Power Line Attachment, 220 VAC Single-Phase 50A

The 208 VAC, three-phase, 50 Amp. source provides about 16.5 KW of power and is required when the system includes two or more 3341 or 3343 disk drives. Figure 2-3 illustrates the power line attachment to the Main AC Power Distribution Panel.

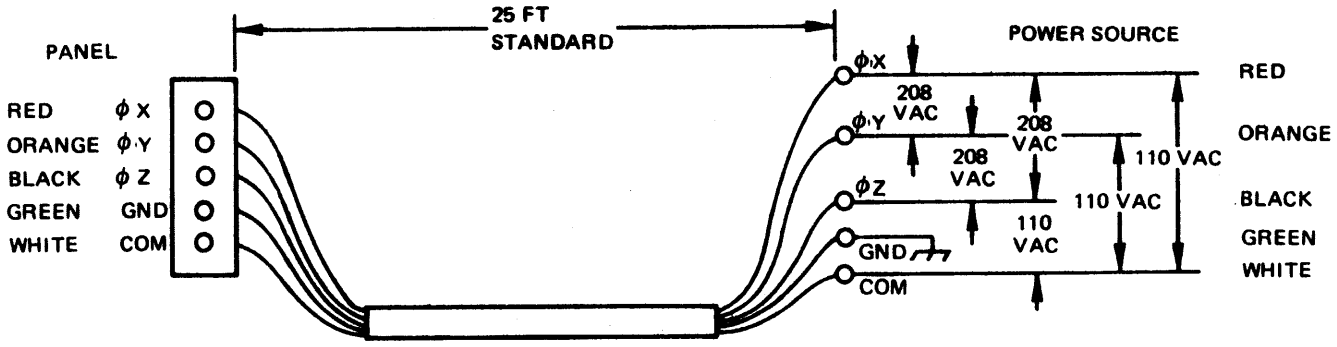

Figure 2-3. Power Line Attachment, 208 VAC, Three-Phase 50A

2.2.2 AC Power Sources for European Use

Three different AC sources are considered for European applications:

1. 220 VAC, single-phase, 30 A source
2. 440 VAC, single-phase, 30 A source
3. 382 VAC, three-phase, 40 A source

The 220 VAC, single-phase 30 Amp. source provides 6.6 KW of power and should be used only with small systems that do not include either a 3341 or 3343 disk drive. Figure 2-4 illustrates the power line attachment to the Main AC Power Distribution Panel.

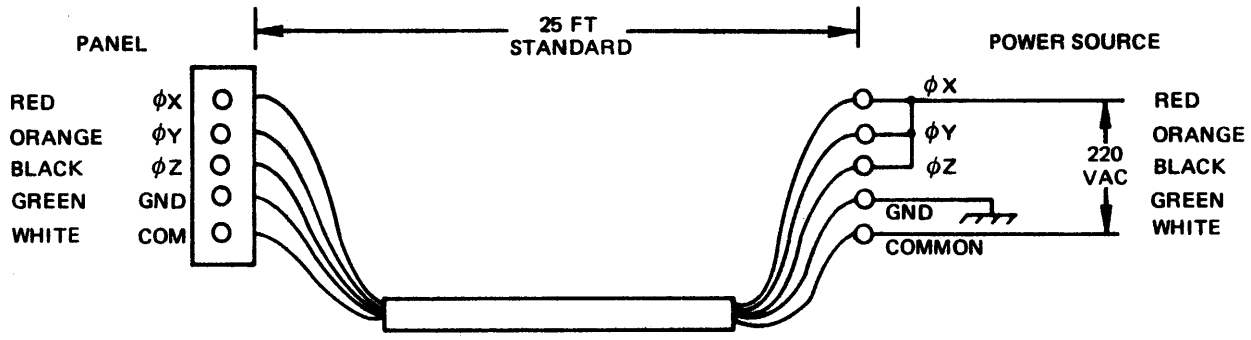

Figure 2-4. Power Line Attachment, 220 VAC Single-Phase 30A

The 440 VAC, single-phase, 30 Amp. source provides about 8.8 KW of power and should be used with systems that include only one 3341 or 3343 disk drive. Figure 2-5 illustrates the power line attachment to the Main AC Power Distribution Panel.

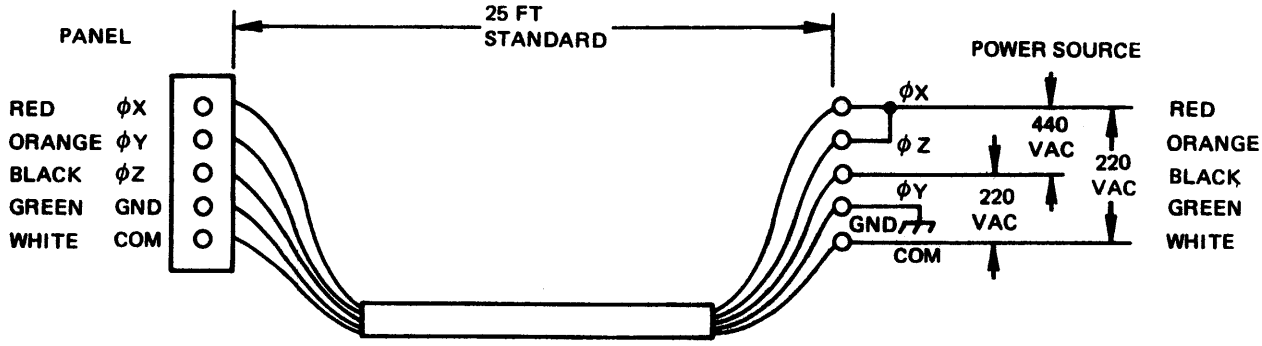

Figure 2-5. Power Line Attachment, 440 VAC Single-Phase 30A.

The 382 VAC, three-phase, 40 Amp. source provides about 16.5 KW of power and is required when the system includes two or more 3341 or 3343 disk drives. Figure 2-6 illustrates the power line attachment to the Main AC Power Distribution Panel.

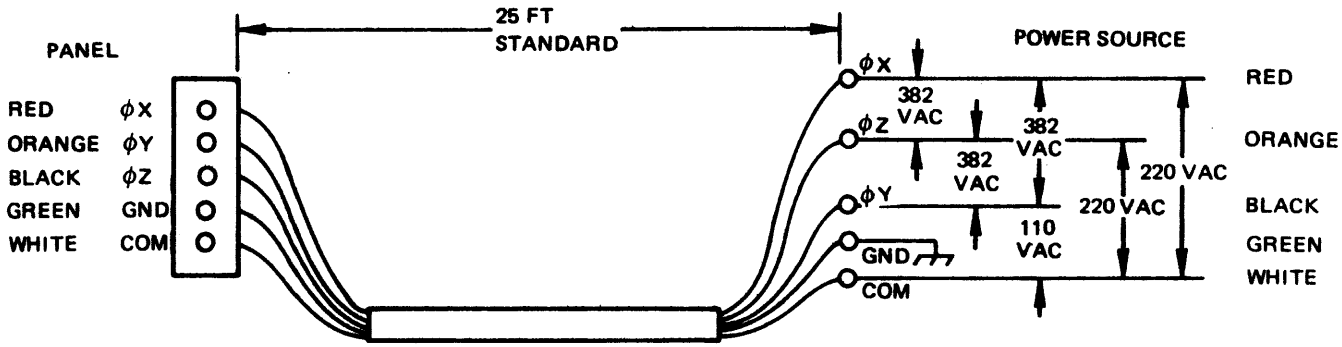

Figure 2-6. Power Line Attachment, 382 VAC Three-Phase 40A

2.3 PHYSICAL SPACE CONSIDERATIONS

Before the system is received, the installation planner must have a clear idea of the physical dimensions of each element of the system, how much clearance is required, and the length of cabling that joins each peripheral unit to the controller enclosure or processor. Table 2-3 provides a summary of these specifications.

The basic system is comprised of the SPC-16 processor and a processor DC power supply and, if applicable, a Model 1615 I/O enclosure and an I/O DC power supply.

The cable joining the processor DC power supply and the SPC-16 has a standard length of 5 feet, as does the cable joining the I/O enclosure and its power supply. The cable joining the I/O enclosure and the SPC-16 has a standard length of 3 feet.

Further information regarding cabling, such as maximum allowable cable lengths, the basic system and the peripheral units can be obtained by reading Section 4 of this manual.

Perhaps the most efficient way to organize an SPC-16 system, and the way recommended by General Automation, is to use one or more Model 1901 or 1910 System Enclosures. The System Enclosure is designed to accept the basic system and a combination of standard GA rack-mount peripheral units. Section 2.3.1 presents recommended arrangements for several system configurations.

The installation planner should allocate minimum access clearances of 24-inches to the front and rear of an SPC-16 processor and 30-inches to the front and rear of all peripheral units. Minimum side access clearance should be 30-inches for any unit unless it is abutted to another unit.

2.3.1 Racking Arrangements

In order to make the most efficient use of existing space, General Automation recommends that systems that include more than one rack-amount peripheral unit use a GA System Enclosure, either Model 1901 or 1910. The System Enclosure can accommodate an SPC-16 computer and its power supply as well as an I/O Enclosure and I/O power supply and a combination of rack-mount peripheral units.

The following system elements are designed to be mounted in a System Enclosure.

- SPC-16 Automation Computer
- 1903-1555/2555 Processor Power Supply
- 1615 I/O Enclosure
- 1903-1225/2225 I/O Power Supply

Table 2-3. Summary of Specifications

Model	Unit	Weight (Pounds)	Width (Inches)	Depth (Inches)	Height (Inches)	Std. Cable Length Peripheral Unit to Controller (Ft)	Locate
SPC-16/40/60/80	Processor	55 max.	19	21.7	10.44	N.A.	Table Top/System Enclosure
SPC-16/45/65/85	Processor	75 max.	19	21.7	10.44	N.A.	Table Top/System Enclosure
3314-1001	Card Punch	275	38	40	39	15	Floor Standing
3314-1000	Card Punch	325	38	40	39	15	Floor Standing
3315	Card Reader	75	23	18	14	15	Table Top
3316/3317/3318	Card Reader	81	19.25	14	11	15	Table Top
3321-1000, -1010	Paper Tape Reader	25	19	7.5	7	8	System Enclosure
3321-1020	Paper Tape Reader	46	19	9	8.7	8	System Enclosure
3322-1000, -1010	Paper Tape Punch	37	19	11.8	10.5	8	System Enclosure
3322-1020	Paper Tape Punch	44	19	11.8	10.5	8	System Enclosure
3325	Paper Tape Reader/ Punch	40	19	11.8	10.5	8	System Enclosure
3331/3332	Magnetic Tape Transport	90	19	14.36	24	10	System Enclosure
3333	Magnetic Tape Transport	100	19	14.36	24	10	System Enclosure
3334/3335	Magnetic Tape Transport	90	19	14.36	24	10	System Enclosure
3336	Magnetic Tape Transport	100	19	14.36	24	10	System Enclosure
3341	Disk Storage Drive	350	30	24	40.3	Fig.4-29	Rollabout on Casters
3342	Head per Track Storage Drive	110	19	19	12.25	8	System Enclosure
3343	Disk Storage Drive	350	30	24	40.3	Fig.4-29	Rollabout on Casters
3346/3347	Disk Storage Drive	75	19	28	8.75	10	System Enclosure
3349	Floppy Disk Storage System	70 (2 drives)	19	15	10.5	6	System Enclosure
3353	Line Printer	650	36	24	42.8	15	Skids
3362	System Console TTY	56	22	18.5	32.9	20	Floor Standing
3363	System Console TTY	225	40	24	38.5	20	Floor Standing

- 3321 Paper Tape Reader
- 3322 Paper Tape Punch
- 3325 Paper Tape Reader/Punch
- 3331/3332/3333 9-Track Magnetic Tape Unit
- 3334/3335/3336 7-Track Magnetic Tape Unit
- 3342 Head Per Track Storage Drive
- 3346/3347 Disk Storage Drive
- 3349 Floppy Disk Storage System

This section illustrates recommended arrangements for various SPC-16 system configurations, using the General Automation 1901 System Enclosure. The following configuration examples are shown:

- Figure 2-7 shows an SPC-16/40/60/80 mounted with a 1615 I/O Expansion Chassis, a Paper Tape Reader and a Paper Tape Punch.
- Figure 2-8 shows an SPC-16/40/60/80 mounted with a 3346 or 3347 Disk unit, a Paper Tape Reader and a Paper Tape Punch.
- Figure 2-9 shows an SPC-16/45/65/85 mounted with a 1615 I/O Expansion Chassis.
- Figure 2-10 shows an SPC-16/45/65/85 mounted with a 1615 I/O Expansion Chassis and optional Paper Tape Reader and Paper Tape Punch.
- Figure 2-11 shows an SPC-16/45/65/85 mounted with a 1615 I/O Expansion chassis, a 3346 or 3347 Disk unit, and optional Paper Tape Reader and Paper Tape Punch.
- Figure 2-12 shows an SPC-16/45/65/85 mounted with two 1615 I/O Expansion Chassis and optional Paper Tape Reader.

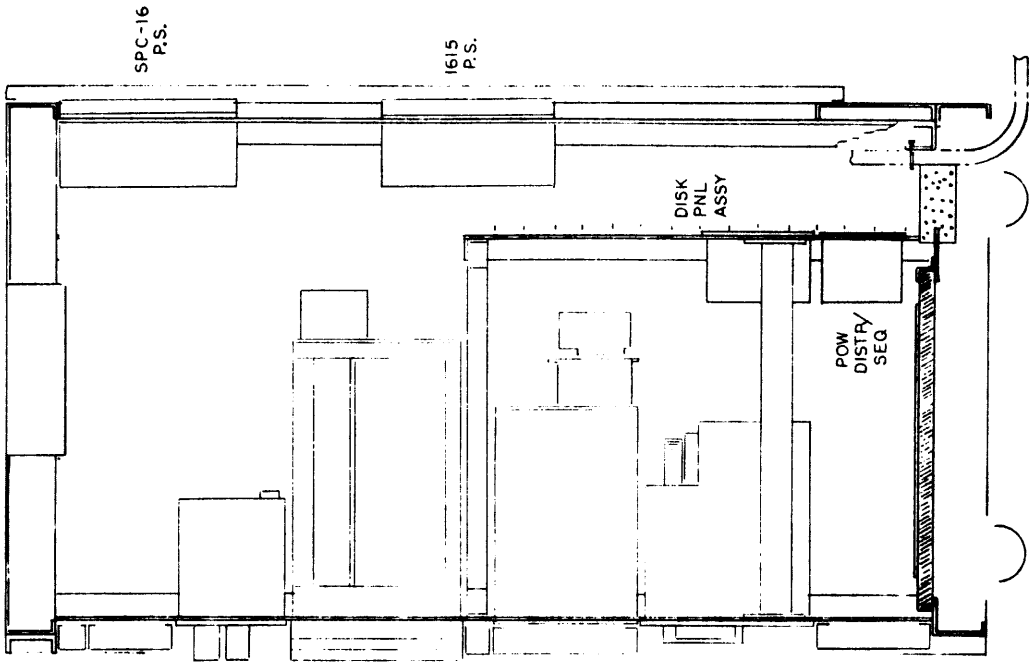

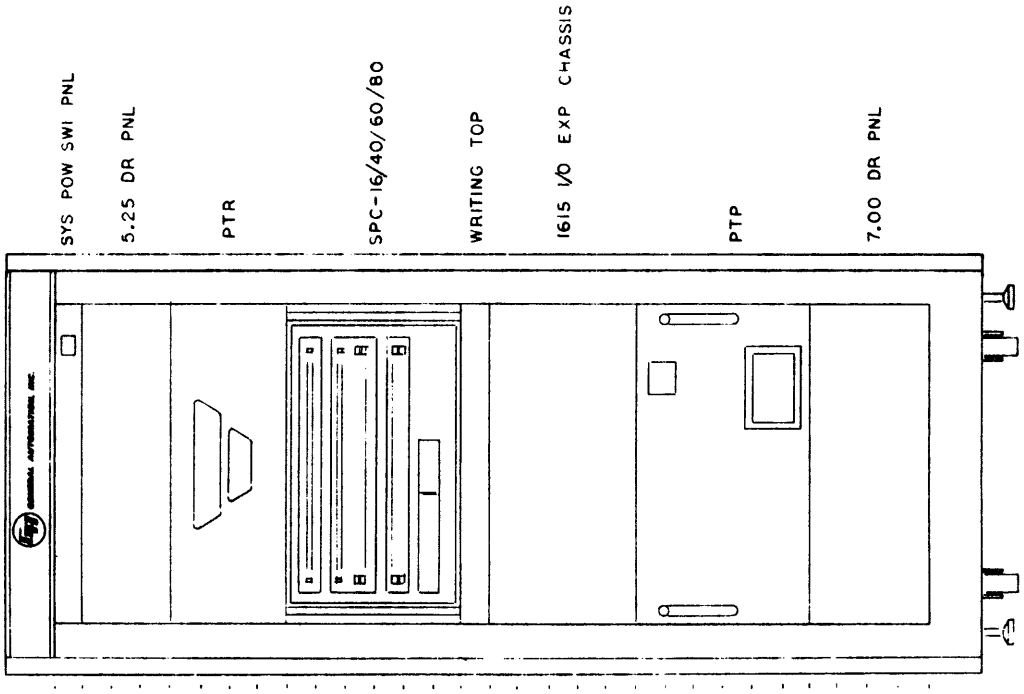

Figure 2-7. 1901 System Enclosure with SPC-16/40/60/80
1615 I/O Expansion Chassis, Paper Tape Reader and
Paper Tape Punch

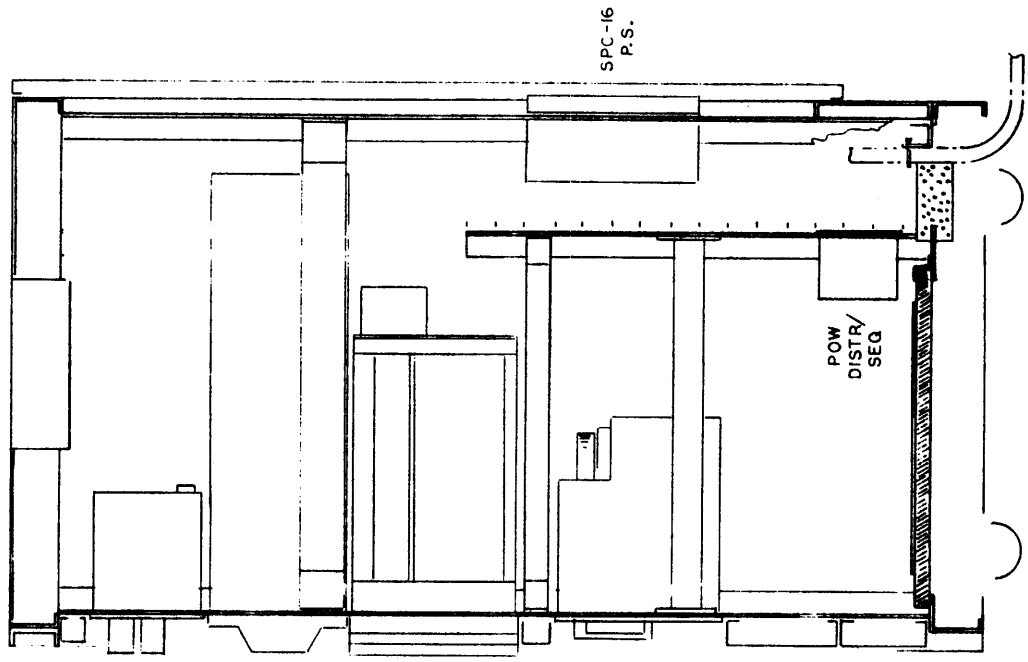

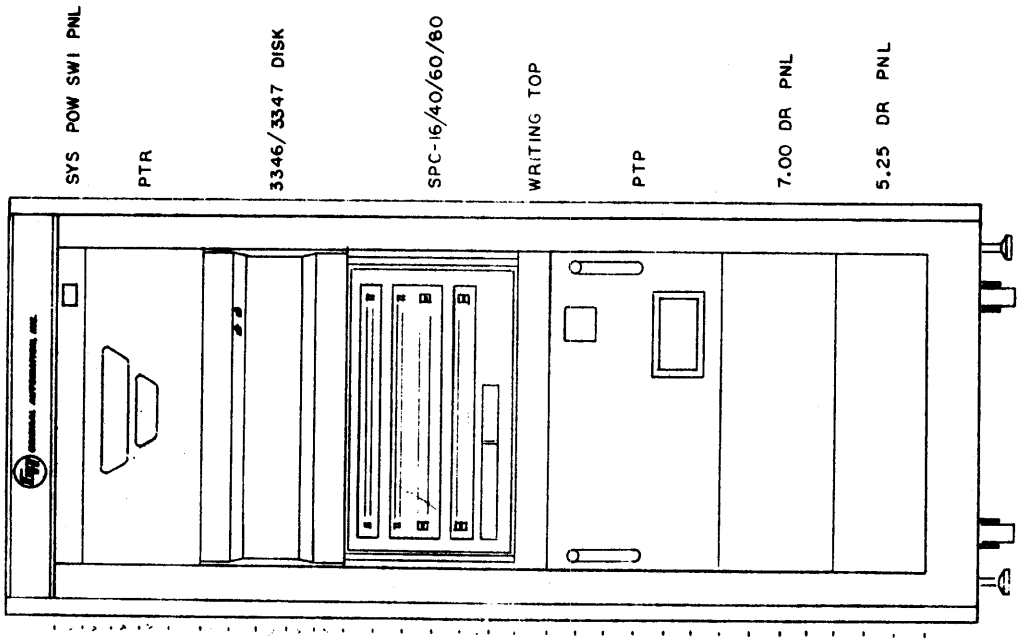

Figure 2-8. 1901 System Enclosure with SPC-16/40/60/80, 3346/3347 Disk, Paper Tape Reader and Paper Tape Punch

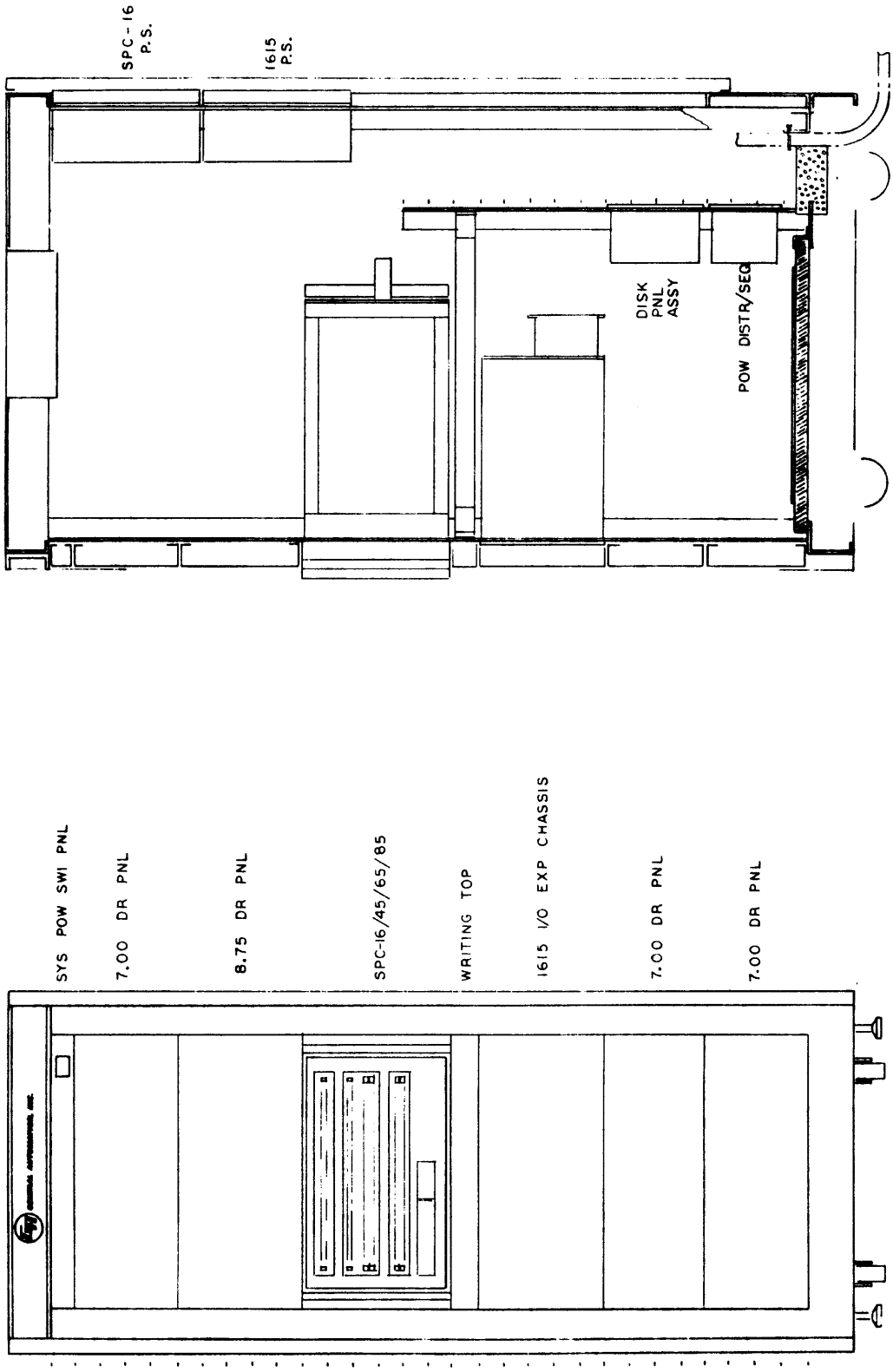

Figure 2-9. 1901 System Enclosure with SPC-16/45/65/85 and 1615 I/O Expansion Chassis

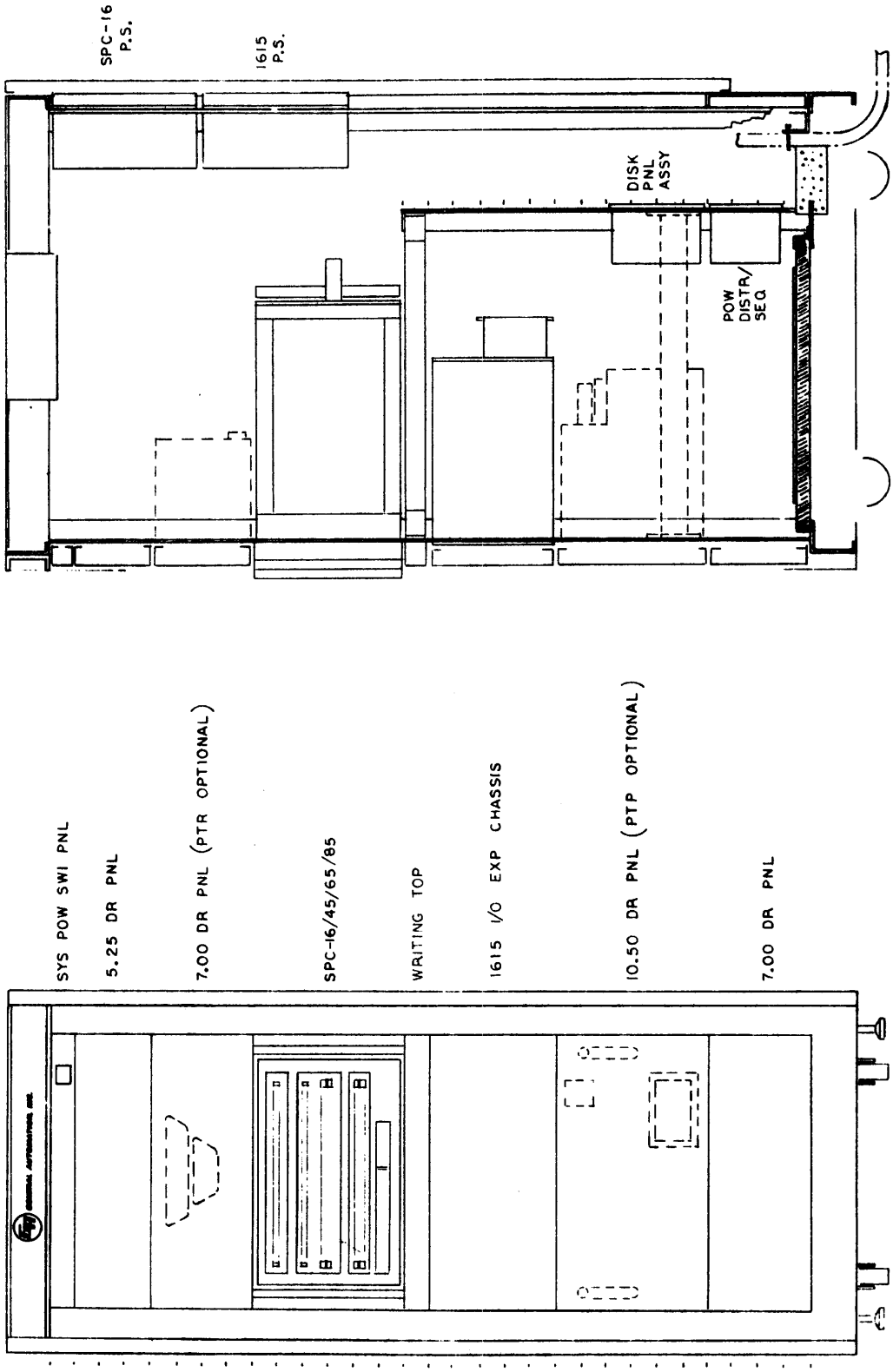

Figure 2-10. 1901 System Enclosure with SPC-16/45/65/85, 1615 I/O Expansion Chassis, Paper Tape Reader (Optional) and Paper Tape Punch (Optional)

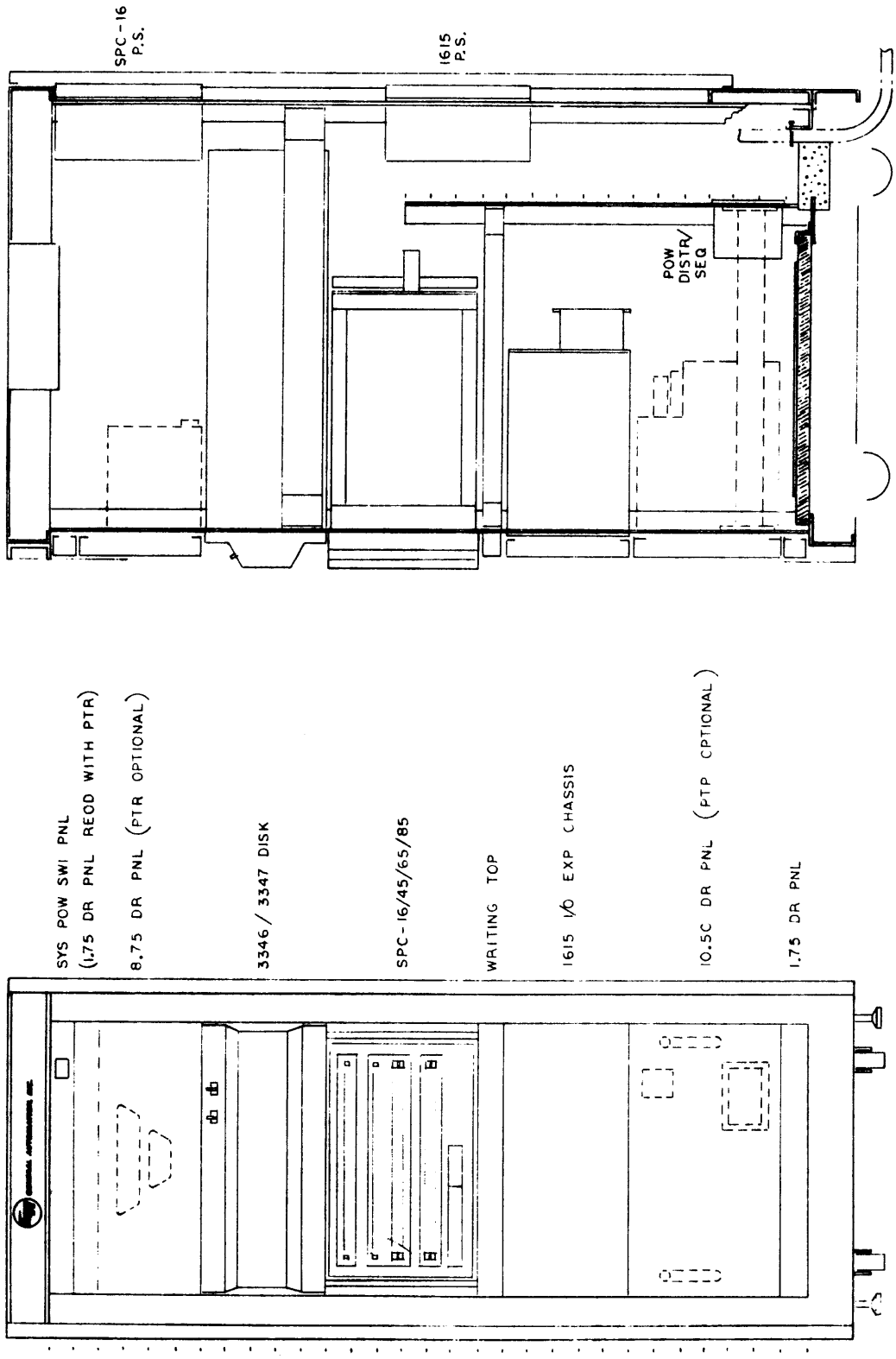

Figure 2-11. 1901 System Enclosure with SPC-16/45/65/85, 1615 I/O Expansion Chassis, 3346/3347/ Disk, Paper Tape Reader and Paper Tape Punch

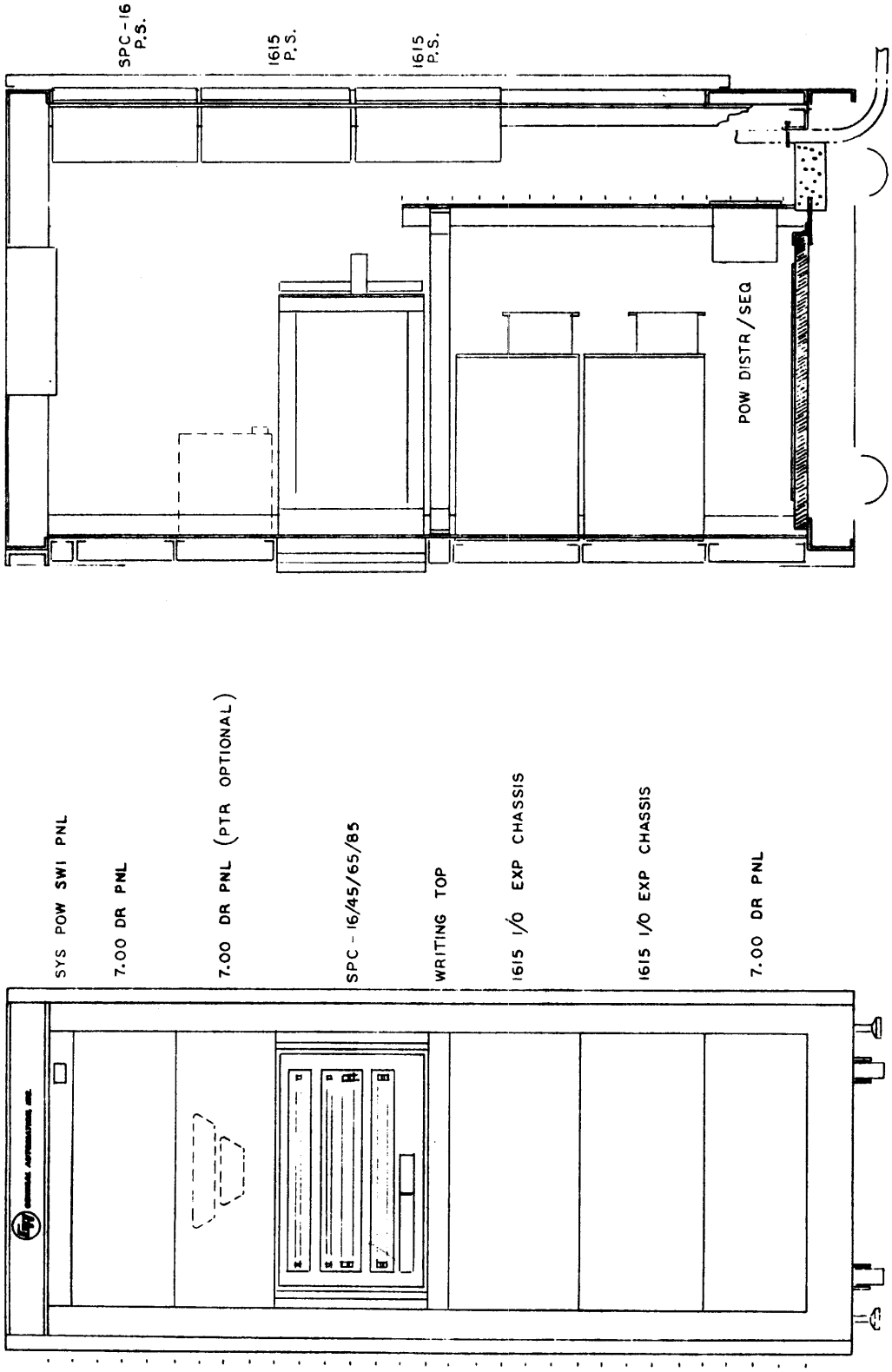

Figure 2-12. 1901 System Enclosure with SPC-16/45/65/85, Two 1615 I/O Expansion Chassis and Paper Tape Reader (Optional)

SECTION 3
UNPACKING THE SYSTEM

When the packaged system elements have arrived, they should be moved to their approximate permanent location before unpacking. Moving the packages with the skid, packing and wrapping bands intact guards against damage to the cabinets. Lighter packages should be hand-carried, heavier packages should be carted on a dolly.

The Field Service representative should check to see that all hardware ordered is either included in the current shipment or is on order. In addition to the hardware, the following items should be included:

- An ASDS (Automated Software Distribution System) Packing List, which is a list of all software, software documentation and hardware documentation required for the particular system configuration.
- The items listed in the ASDS Packing List.
- A System Integration Package, which contains prints (logic, assembly and cabling), I/O assignment sheets and I/O board configuration sheets applicable to the system.
- Operator and Maintenance manuals and accessory kits for system peripheral units.

All of the above items are usually left at the customer installation site following system installation and verification.

General Automation products are packaged in shock-absorbing materials. Loose parts and free-moving or spring-mounted parts are held in place by tape and/or shipping brackets. All packing materials should be removed and saved until the system has been judged to be in proper working condition.

Unpacking should be performed in a slow, deliberate manner. Hooks and other sharp objects should not be jabbed into the unpacked portion of a package.

Specific unpacking instructions for each peripheral unit are included in the vendor manuals shipped with the system and are not, therefore, duplicated in this manual. These manuals are referenced in the applicable subsections of Sections 4.3.

After a unit is unpacked and assembled, it should be tested off-line before installing it in the system. Off-line test procedures are also described in the vendor manuals referenced in Section 4.3.

SECTION 4
INSTALLING THE SYSTEM

This section contains the information necessary to connect and mount the elements of the system. Section 4.1 provides general mounting information. Section 4.2 describes interconnection of the SPC-16 processor and I/O Enclosure and their respective power supplies. Section 4.3 describes the standard General Automation peripheral units and their connection to the system.

4.1 GENERAL MOUNTING INFORMATION

As discussed in Section 2.3.1, the standard method of organizing a system that includes several rack-mount peripheral units is to mount them in a GA System Enclosure. Figure 4-1 is an installation drawing of the Model 1910 System Enclosure. The Model 1901 System Enclosure is identical to the Model 1910 except that the AC outlet strip is replaced by a power distribution panel in the Model 1901. This difference is discussed in greater detail in Section 4.2.3.

Both model System Enclosures contain three pairs of mounting angles (front, intermediate and rear) to accept units designed for rack-mounting. Each mounting angle is drilled with holes spaced in a 5/8 inch - 5/8 inch - 1/2 inch pattern; all holes accept 10-32 screws.

When a Model 1901 or 1910 System Enclosure is ordered with a system, General Automation normally ships all appropriate units already mounted in the Enclosure. The mounting information below is intended to serve as an aid to installing units that were not available at the time of the original shipment.

The front mounting angles accept peripheral and computer units that are mounted in cantilever fashion. These units are:

- SPC-16/40/45/60/65/80/85 Computer
- 1615 I/O Enclosure
- 3321 Paper Tape Reader
- 3331/3332/3333 9-Track Magnetic Tape Unit
- 3334/3335/3336 7-Track Magnetic Tape Unit
- 3349 Floppy Disk Storage System

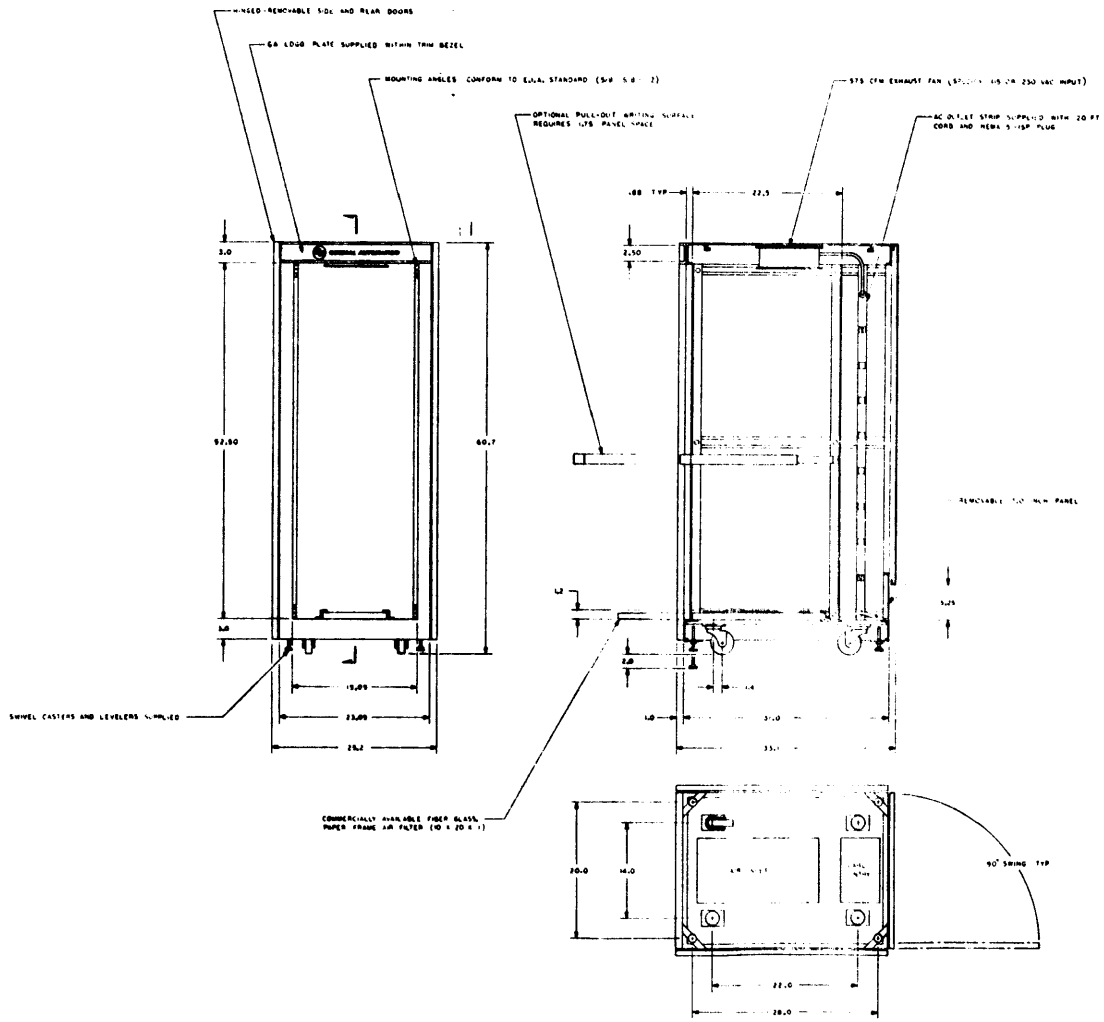

Figure 4-1. Installation Drawing, System Enclosure Model 1910

Cantilevered units are easily mounted by connecting them to the front mounting angles with 10-32 screws.

Some units require a degree of accessibility not provided by the front panel; these units are mounted on telescoping mounting slides that permit the unit to be pulled forward for service. The following must be installed on mounting slides:

- 3322 Paper Tape Punch
- 3325 Paper Tape Reader/Punch
- 3342 Head Per Track Storage Drive
- 3346/3347 Disk Storage Drive

Users wishing to install either the SPC-16/40/60/80 or SPC-16/45/65/85 Computer or the 1615 I/O Enclosure on mounting slides may order the Optional Chassis mounting slides as 1995-0001. Installation of these units is illustrated in Figure 4-2. Brackets on the mounting slides are attached to the System Enclosure's front and intermediate mounting angles, respectively, and the units are then screwed onto the mounting slides. The intermediate mounting angles can be loosened and positioned forward or backward within the System Enclosure.

The rear mounting angles are provided to accept attachment of the Processor Power Supply and I/O Power Supply, as shown in Section 2.3.1.

4.2 BASIC SYSTEM

The basic system is comprised of the SPC-16 computer and I/O Enclosure (if applicable), their respective power supplies, and the Main AC Power Distribution Panel. Section 4.2.1 provides orientation material on the elements of the basic system. Section 4.2.2 describes interconnection of these elements. Section 4.2.3 describes the Main AC Power Distribution Panel and its connection to the AC power source.

4.2.1 Organization of the Basic System

The new SPC-16 processor family consists of six computers, which offer a choice of three memory cycle speeds and two packaging configurations; these are:

Computer	Cycle Speed (Nanoseconds)	Packaging Configuration
SPC-16/40	1440	Integral I/O
SPC-16/45	1440	External I/O
SPC-16/60	960	Integral I/O
SPC-16/65	960	External I/O
SPC-16/80	800	Integral I/O
SPC-16/85	800	External I/O

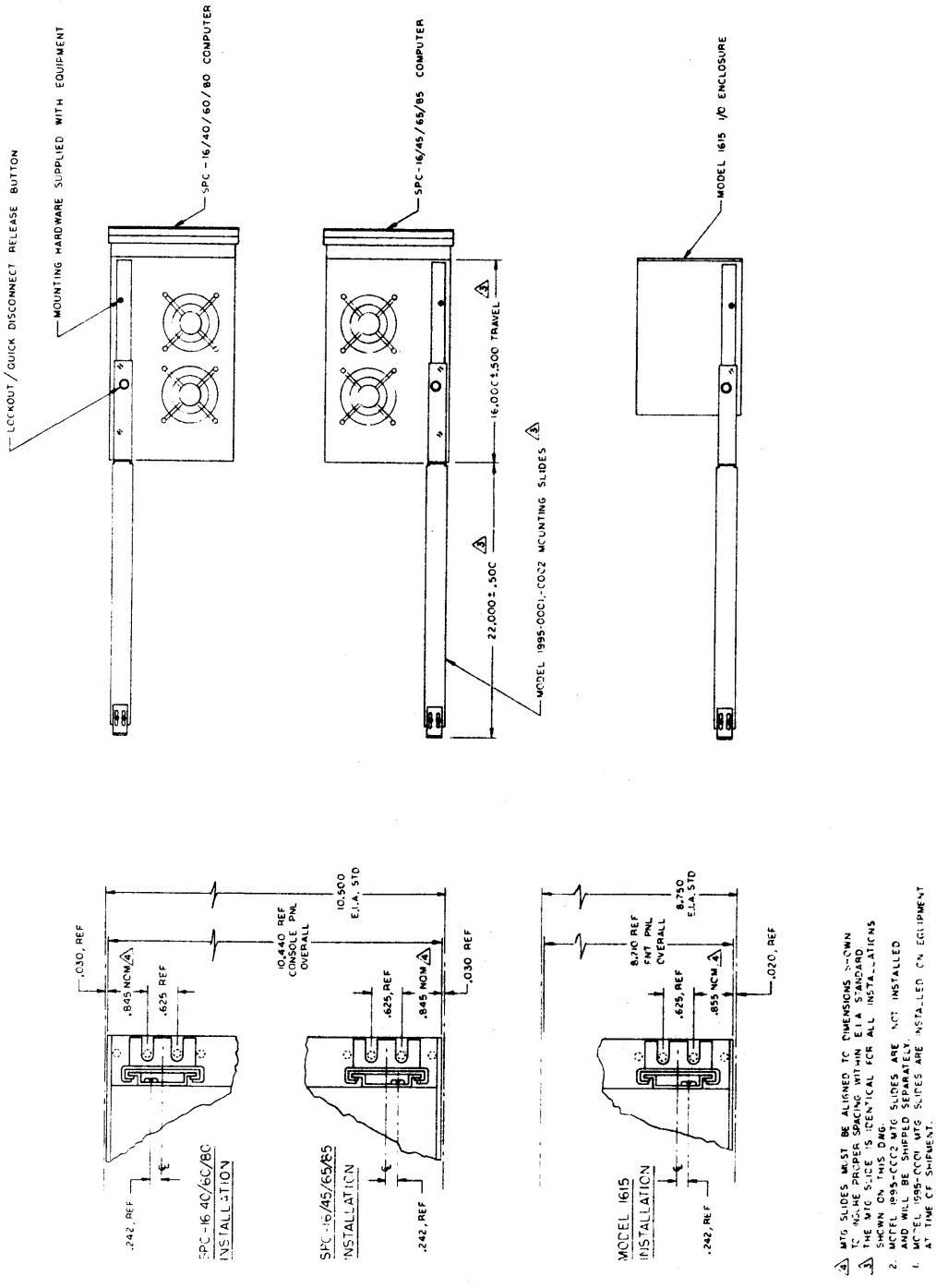

Figure 4-2. Installation Drawing, Optional Mounting Slides - Model 1995 - 0001, 0002

In those models that use the Integral I/O packaging configuration (SPC-16/40, 60 and 80) up to eight peripheral controller boards are housed in the computer mainframe. In those models that use the External I/O packaging configuration (SPC-16/45, 65 and 85), all peripheral controller boards are housed in one or more external I/O enclosures.

The SPC-16/40/60/80 processor can be ordered in three basic versions:

- o Model 1640 (or 60 or 80) - 1159 is supplied with one 4K memory board and can accommodate up to three additional 4K memory boards. (16K max. capacity).

- o Model 1640 (or 60 or 80) - 1259 is supplied with one 8K memory board in slot no. 1 and can accommodate up to three additional memory boards. Any memory slot can accommodate either a 4K or 8K board, but only one 4K board can be used in any one -1259 memory configuration (32K max. capacity).

- o Model 1640 (or 60 or 80) - 1359 is identical to the -1259 above, except that its basic configuration consists of one 4K memory board in

Figure 4-3 is an installation drawing of the SPC-16/40/60/80.

The SPC-16/45/65/85 processor can be ordered in three basic versions:

- o Model 1645 (or 65 or 85) - 1100 is supplied with one 4K memory board and can accommodate up to three additional 4K memory boards without purchasing additional options. Memory can be expanded to accommodate four additional 4K memory boards by installing the optional Internal Memory Expansion Board, 1645 (or 65 or 85) -0097.

- o Model 1645 (or 65 or 45) - 1200 is supplied with one 8K memory board in slot no. 1 and can accommodate up to three additional memory boards without purchasing additional options. Memory can be expanded to accommodate four additional memory boards by installing the optional Memory Expansion Chassis, 1645 (or 65 or 85) -0095. Any memory slot can accommodate either a 4K or an 8K board, but only one 4K board can be used in any one -1200 memory configuration.

- o Model 1645 (or 65 or 85) - 1300 is identical to the -1200 above, except that its basic configuration consists of one 4K memory board in slot no. 1.

Figure 4-4 is an installation drawing of the SPC-16/45/65/85 model 16xx - 1100.
Figure 4-5 is an installation drawing of the SPC-16/45/65/85 model 16xx - 1200 or -1300 with the 16xx - 0095 option installed.

Figure 4-6 is an installation drawing of the Processor Power Supply, used with all models of the new SPC-16 processor family.

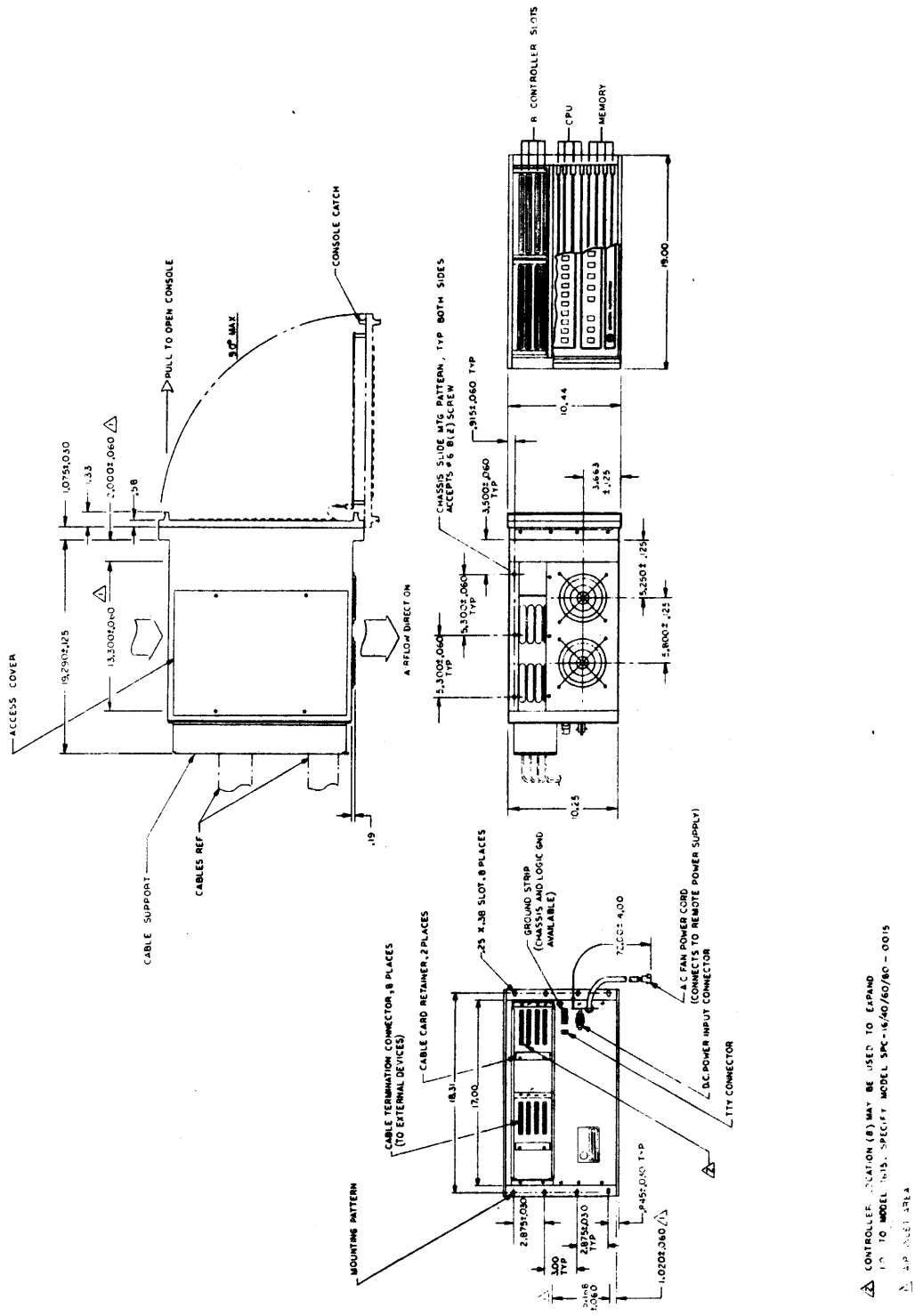

Figure 4-3. Installation Drawing SPC-16/40/60/80
Model 1640 (or 60 or 80) -1159, -1259 or -1359

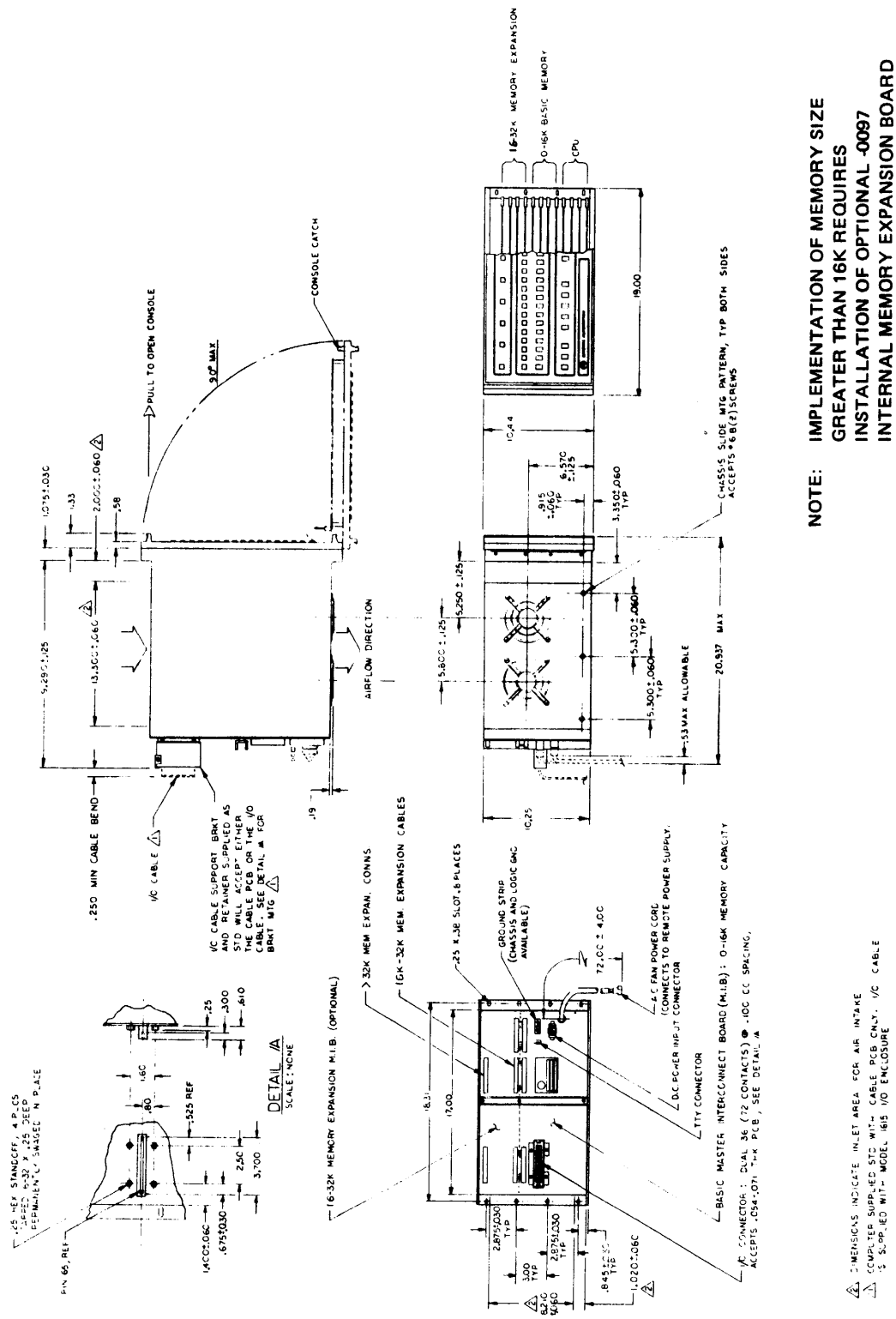

Figure 4-4. Installation Drawing, SPC-16/45/65/85 with 0-32K Memory Capability Model 1645 (or 65 or 85) -1100

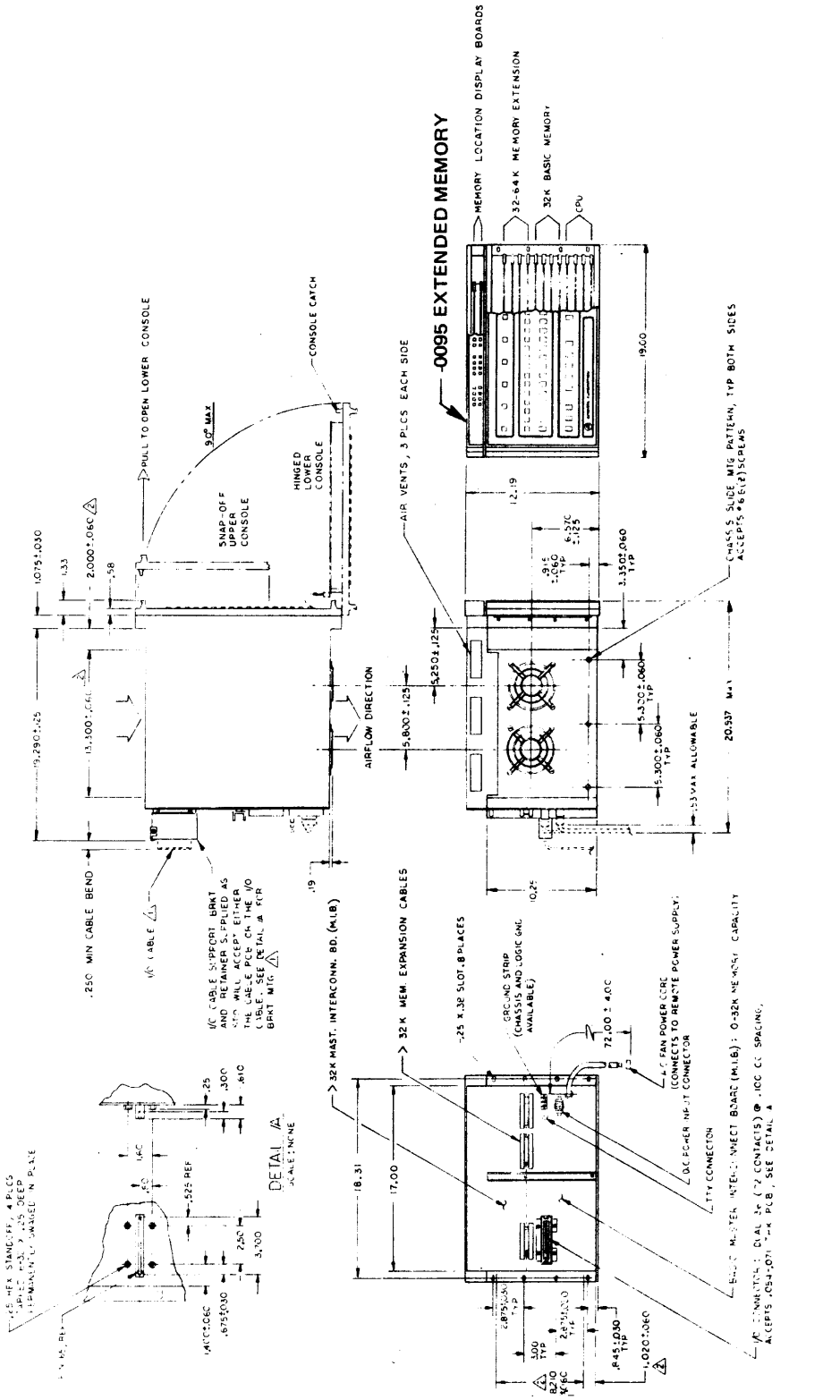

Figure 4-5. Installation Drawing SPC-16/45/65/85 with Extended 32-64K Memory Option Model 1645 (or 65 or 85) -1200 or -1300 with -0095 Memory Expansion Chassis Installed

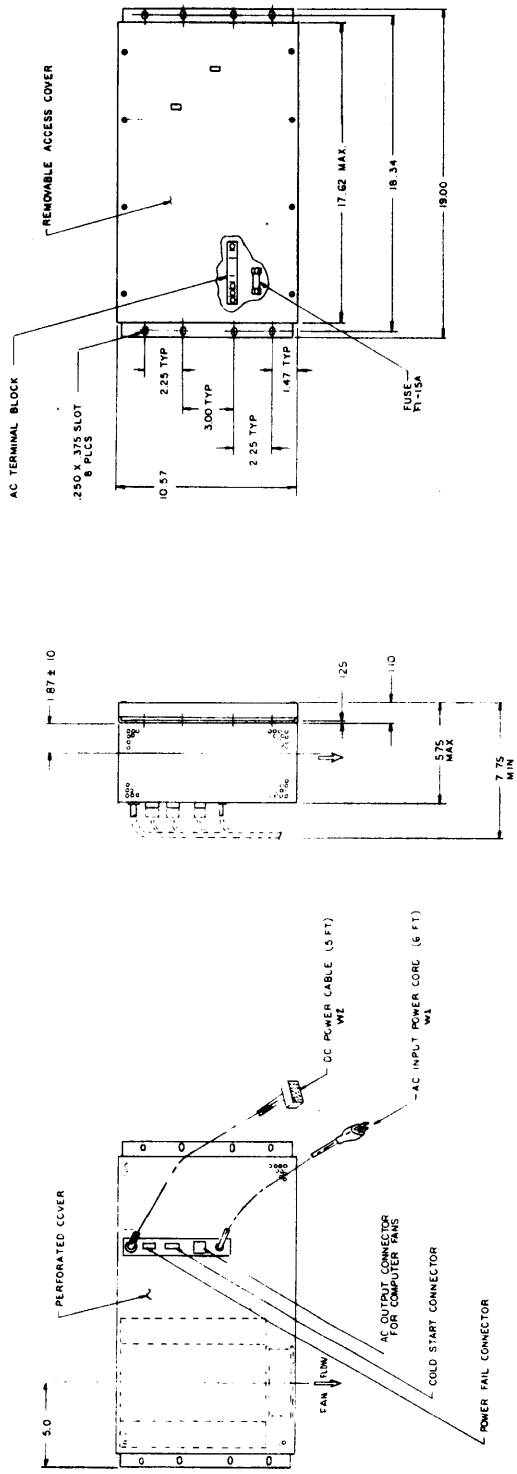

Figure 4-6. Installation Drawing, Processor Power Supply - Model 1903 - 1555/2555

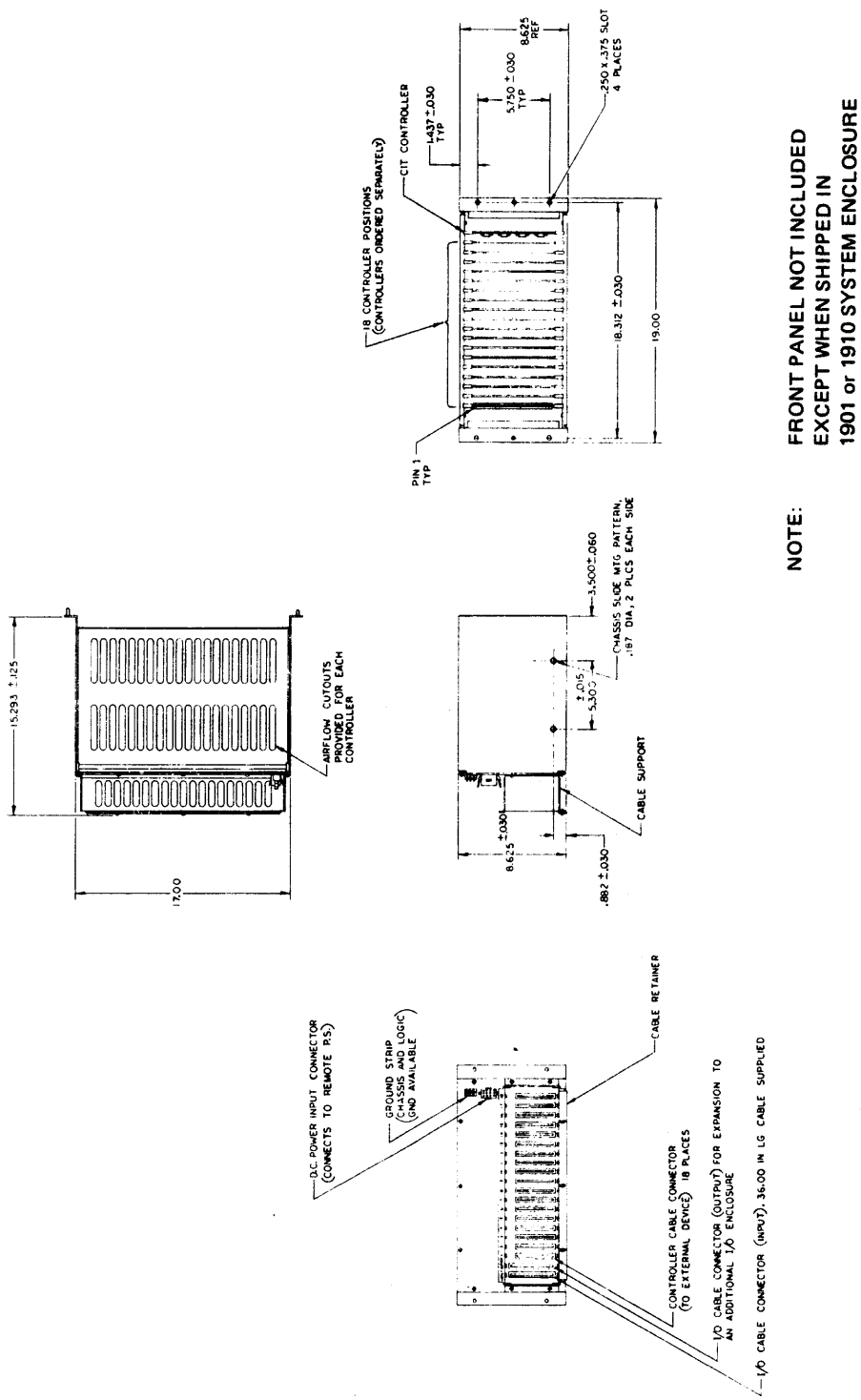

Figure 4-7. Installation Drawing, I/O Enclosure - Model 1615-0001

Figure 4-7 is an installation drawing of the Model 1615-1101 I/O Enclosure, which is optional for the SPC-16/40/60/80 series and standard for the SPC-16/45/65/85 series. The power supply for the I/O Enclosure is identical in appearance to the Processor Power Supply (Figure 4-6) and is not, therefore, illustrated separately.

INTERNAL BOARD ARRANGEMENTS

General Automation ships all SPC-16 systems with the necessary CPU board, memory modules and I/O Controller modules inserted in their appropriate card slots. In the SPC-16/40/60/80 models (Figure 4-8) the I/O controllers are housed in the computer mainframe. This configuration provides eight card slots for I/O controller boards, four card slots for memory boards and four card slots for processor logic boards. The internal arrangement of these boards is shown below in Figure 4-8:

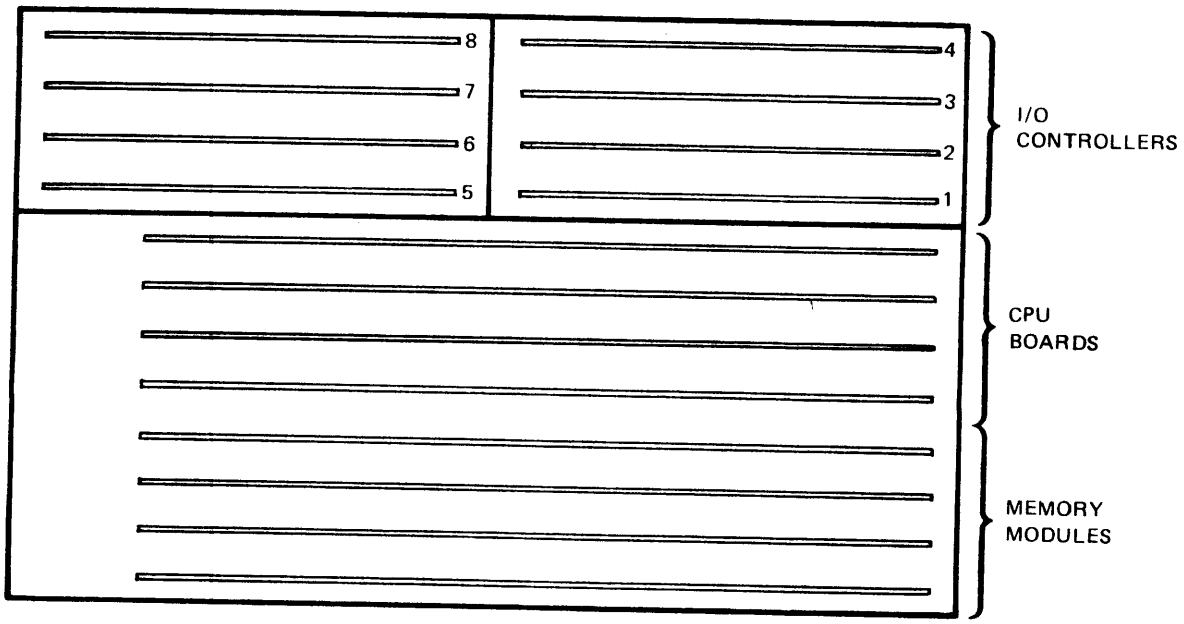

FOR THE 16xx-1259. xx = 40, 60, 80

Figure 4-8. SPC-16/40/60/80 Internal Board Arrangement

Controller board numbers shown are based on access priority.

If more than eight controllers are required, the additional controllers are housed in one or more I/O Enclosures. For I/O Expansion, the computer must contain the -0015 option and a Cable Interface Driver module (1615-0202) must be placed in controller slot 8.

In the SPC-16/45/65/85 models, all I/O controllers are housed in the I/O Enclosure. The SPC-16/45/65/85 chassis provides eight card slots for memory boards and four card slots for CPU boards.

If no memory extension options are purchased, the mainframe will accommodate only four memory boards; that is, the standard 1645 (or 65 or 85) -1100 has a 16K capacity, the standard -1200 has a 32K capacity, and the standard -1300 has a 28K capacity. The -0097 option is an extension interconnect board that provides edge connectors for four additional 4K memory boards on the -1100, thereby increasing -1100 memory capability to 32K.

Similarly, the -1200 and -1300 mainframes can be implemented to accept four additional memory boards by ordering the -0095 Memory Expansion Chassis option, which provides control logic for addressing to 48K words and edge connectors to expand memory capability from 32K words to 64K words. The internal board arrangement of a fully-expanded SPC-16/45/65/85, 16yy - 1200, -1300 with -0095 option is shown in Figure 4-9.

I/O BUS CONNECTION

Data is transferred within the SPC-16 system along the I/O Bus. Figure 4-10 illustrates connection of the I/O Bus to each SPC-16 model and to the I/O Enclosure. For the SPC-16/40/60/80, up to eight I/O controllers can be accommodated in the main chassis. These controllers plug into the edge connectors provided on the internal surface of the Master Interconnect Board (MIB). As illustrated, I/O cables from peripheral units have paddle boards that plug into 56-pin edge connectors on the external surface of the MIB. When a Model 1615 I/O Enclosure is required, one SPC-16 internal card slot must be devoted to a Cable Interface Driver (CID) card; a special 72-pin edge connector must be installed on the MIB, at a position corresponding to the CID, to accommodate the External I/O Bus cable paddle board.

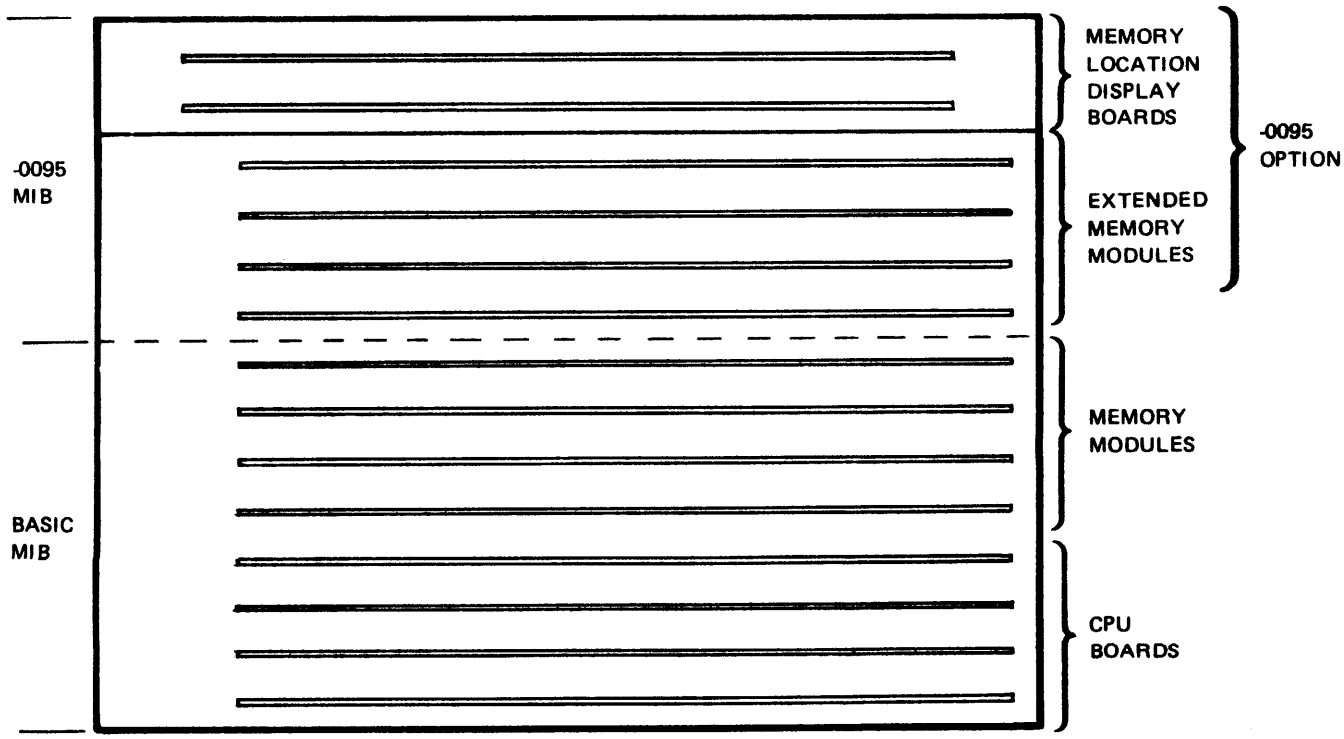

Figure 4-9. SPC-16/45/65/85 Internal Board Arrangement
16yy - 1200, -1300 shown; -1100 not shown

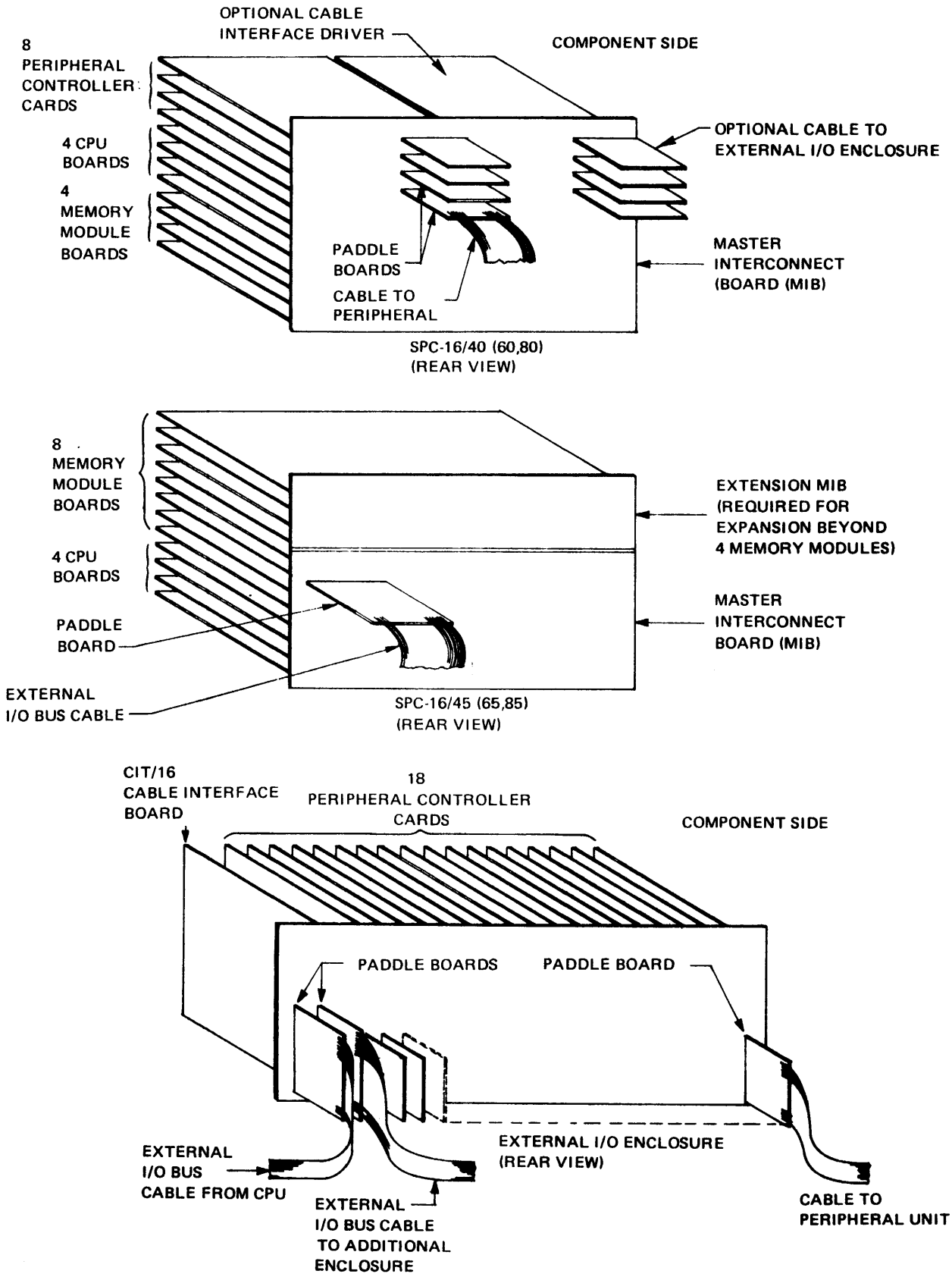

Figure 4-10. I/O Cable Paddle Board Connection

As illustrated for the SPC-16/45/65/85, the External I/O Bus cable paddle board plugs into the 72-pin edge connector provided on the external surface of the main MIB.

A Model 1615 I/O Enclosure will accommodate up to eighteen I/O controller boards. Controller boards plug into the 140-pin edge connectors of the Enclosure MIB. Corresponding 56-pin edge connectors on the external surface of the Enclosure MIB accept paddle boards on the peripheral I/O cables. The External I/O Bus cable enters the 1615 I/O Enclosure via one 72-pin edge connector and, if an additional enclosure is required, leaves the enclosure via another 72-pin edge connector, both of which are provided on the external surface of the Enclosure MIB.

CONTROLLER BOARD PLACEMENT

Controller boards may be arranged in the SPC-16/40/60/80 chassis or the External I/O Enclosure in any order desired. Since the physical configuration of the controller boards establishes the access priority scheme, however, controllers should be located in a fastest-to-slowest order. The controller priority arrangement for the SPC-16/40/60/80 is shown in Figure 4-8; within the I/O Enclosure, the controller board closest to the CIT/16 board has highest access priority.

The following order provides a recommended highest-to-lowest priority for controller board placement:

- Head Per Track Disk Storage Drive*
- Movable Head Disk Storage Drive(s)*
- Floppy Disk Drive(s)*
- Magnetic Tape Drive(s)*
- Line Printer*
- Card Reader*
- Paper Tape Reader
- Paper Tape Punch
- System Console TTY

*NOTE

These controllers use the DMA facility and must be placed in a lower priority slot than the Model 1615-0209 Data Channel Module.

General Automation multi-board controllers must always be placed in physically adjacent slots, although the order of these boards is arbitrary. In certain applications, (e.g., when both a 2-board disk controller and a 3-board MTU controller are placed in a SPC-16/40/60/80 chassis) this stipulation may cause one controller slot to be left vacant in order to maintain access priority. If for any reason an I/O slot between boards is not used by a controller, the vacant slot must be filled with a GA-supplied "Shorter Board" (Model 1916-0000), which maintains the continuity of certain priority signals that daisy-chain down the I/O Bus. In a multi-Enclosure system this requirement also applies to all unused slots in all but the final Enclosure. The final Enclosure may have vacant slots after the last I/O controller.

4.2.2 Cabling For Basic System

The SPC-16 processor is connected to the Model 1903 Processor Power Supply as shown in Figure 4-11. Addition of a single Model 1615 I/O Enclosure and I/O Power Supply requires the additional cabling shown in Figure 4-12. For applications requiring more peripheral units than can be accommodated by a single I/O Enclosure, a second Enclosure may be added; the additional cabling required for a second I/O Enclosure and I/O Power Supply is shown in Figure 4-13 for an SPC-16/45/65/85 system (Enclosure and I/O Power Supply interconnection is identical for SPC-16/40/60/80 systems).

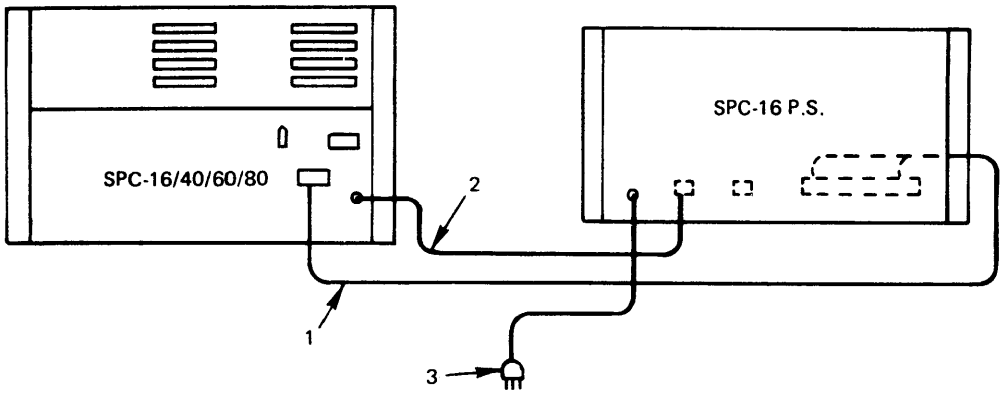

SPC-16/40/60/80, BASIC CONFIGURATION

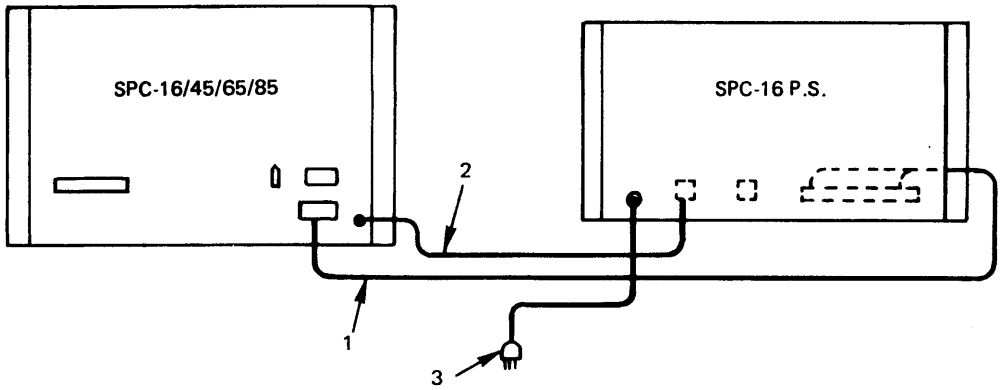

SPC-16/45/65/85, BASIC CONFIGURATION

	PART NUMBER	STD. LENGTH	MAX. LENGTH	FUNCTION
1	ATTACHED TO P.S.	5 ft	15 ft	DC POWER
2	ATTACHED TO COMPUTER	6 ft	—	AC FAN POWER
3	ATTACHED TO P.S.	6 ft	—	AC POWER

Figure 4-11. Cabling, Basic System

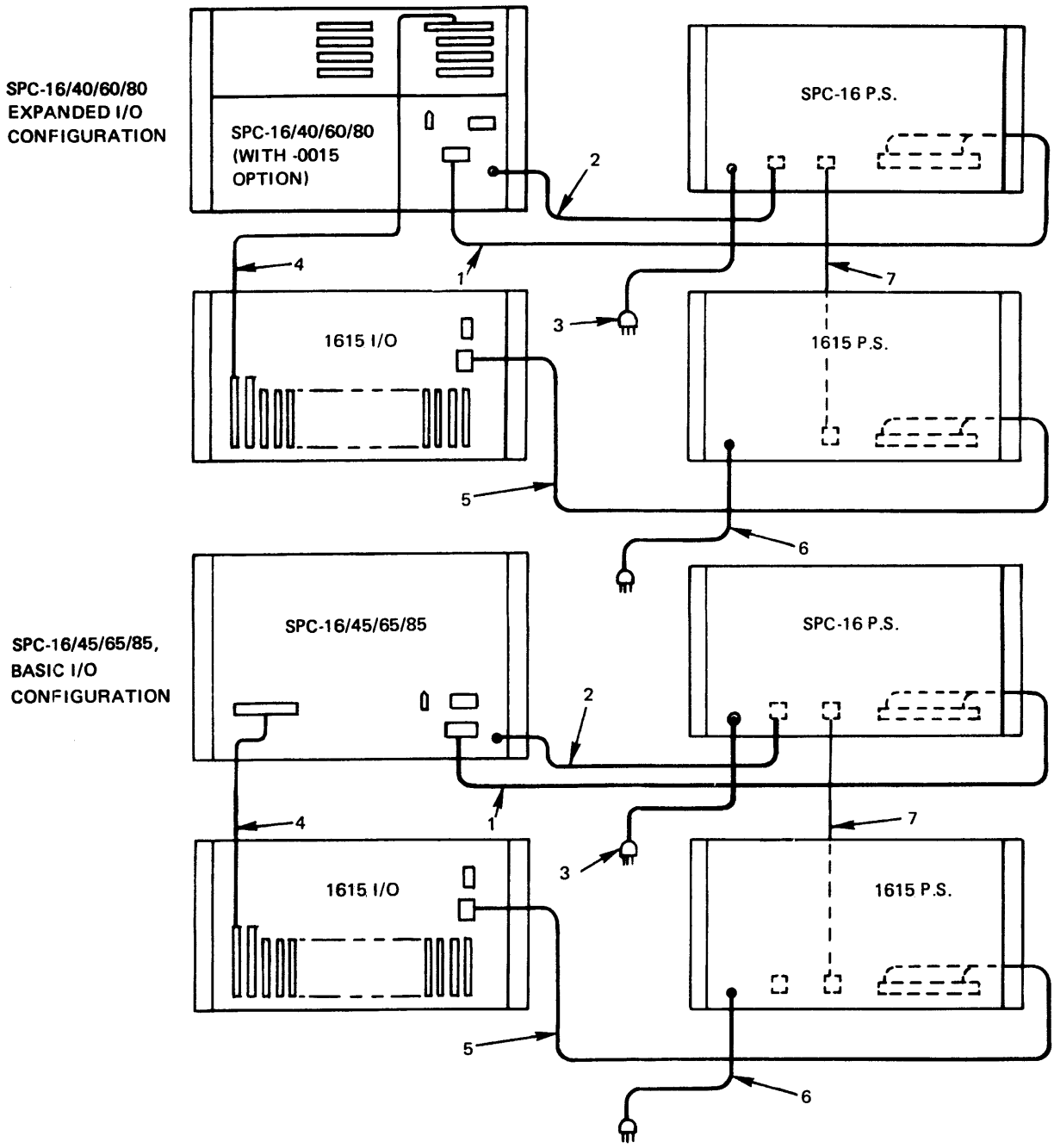

	PART NUMBER	STD. LENGTH	MAX. LENGTH	FUNCTION
1	ATTACHED TO P.S.	5 ft	15 ft	DC POWER
2	ATTACHED TO COMPUTER	6 ft	—	AC FAN POWER
3	ATTACHED TO P.S.	6 ft	—	AC POWER
4	21D00265A31	3 ft	Δ	I/O SIGNAL
5	ATTACHED TO P.S.	5 ft	15 ft	DC POWER
6	ATTACHED TO P.S.	6 ft	—	AC POWER
7	21C00502A01	3 ft	—	PFD CONTROL

⚠ SEE TABLE 4-1

Figure 4-12. Cabling, Basic System with I/O Enclosure

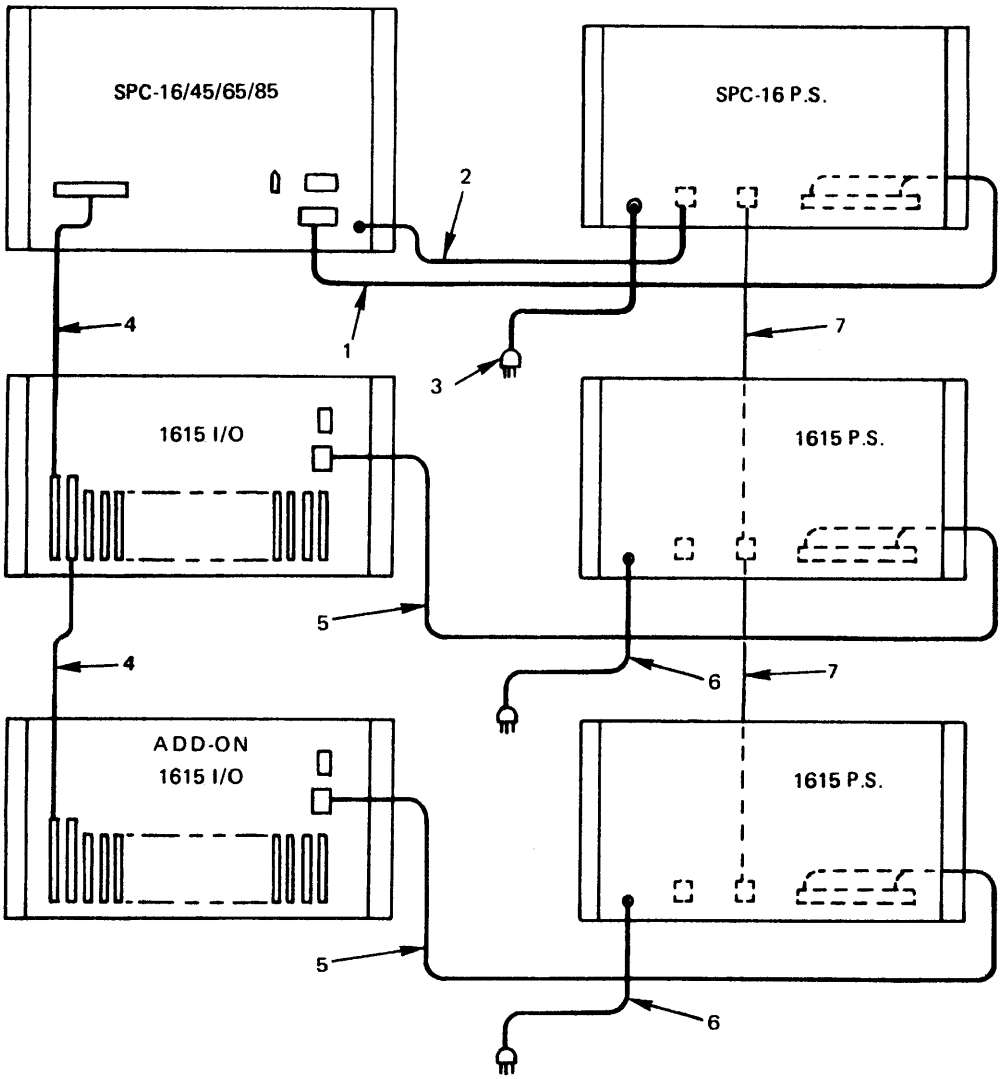

	PART NUMBER	STD. LENGTH	MAX. LENGTH	FUNCTION
1	ATTACHED TO P.S.	5 FT	15 FY	DC POWER
2	ATTACHED TO COMPUTER	6 FT	——	AC PAN POWER
3	ATTACHED TO P.S.	6 FT	——	AC POWER
4	21D00265A51	3 FT	⚠	I/O SIGNAL
5	ATTACHED TO P.S.	5 FT	15 FT	DC POWER
6	ATTACHED TO P.S.	6 FT	——	AC POWER
7	21C00502A01	3 FT	——	PFD CONTROL

⚠ 1 SEE TABLE 4-1.

Figure 4-13. Cabling, Basic System with Two I/O Enclosures

Table 4-1. Maximum Combined I/O Cable Length Between I/O Enclosure and SPC-16

Model	Maximum I/O Cable Length (Total Length to Last I/O Enclosure)
SPC-16/40	80 feet
SPC-16/45	90 feet
SPC-16/60	20 feet
SPC-16/65	30 feet
SPC-16/80	6 feet
SPC-16/85	18 feet

The three-prong plugs shown in these drawings are plugged into the Main AC Power Distribution Panel, which is discussed in Section 4.2.3.

Table 4-2 is a summary of all cabling required to connect the SPC-16 system.

Table 4-2. System Cabling

GA Part No.	Length (Ft)	From	To	Function
90609-015*	15	3341/3343	3341/3343	AC Power
90609-025*	25	Disk Panel	3341/3343	AC Power
90610-025*	25	Disk Panel	3341/3343	DC
90612-015*	15	3341/3343	3341/3343	Signal
90612-025*	25	Disk Panel	3341/3343	Signal
99731-001*	-		3341-3343	Term. Shoe
301308-9**	-		3346/3347	Term. Plug
301380-009**	4	3346/3347	3346/3347	Signal
10A00029A01	-	3314	Dist. Panel	Line Filter
13D00104A01	4	Signal Comm.	3331/3332/ 3333	Disconnect Panel
13D00104A11	4	Signal Comm.	3334/3335/ 3336	Disconnect Panel
21C00479A01	25	Main Dist. Panel	Aux. Dist. Panel	AC Control
21C00479A11	25	Main Dist. Panel	Aux. Dist. Panel	AC Control
21C00484A01	25	Main Dist.	Aux. Dist. Panel	AC Interconnect

(continued on next page)

Table 4-2. (continued)

GA Part No.	Length (Ft)	From	To	Function
21C00484A11	25	Main Dist. Panel	Aux. Dist. Panel	AC Interconnect
21C00485A01	25	Main Dist. Panel	AC Power Source	AC Power
21C00486A01	10	I/O Enclosure	3346/3347	Signal
21C00502A01	3	SPC-16 P.S.	I/O P.S.	PFD Control
21C00524A01	6	3349	Dist. Panel	AC Power
21C00525A01	6	3349 Power Supply	Dist. Panel	AC Power
21D00194A01	6	Disconnect Panel	Disconnect Panel	Signal
21D00265A31	3	1615 Encl.	Disconnect Panel	I/O Signal
21D00349A01	8	I/O Encl.	3321	Signal
21D00349A11	8	I/O Encl.	3323	Signal
21D00349A21	8	I/O Encl.	3322	Signal
21D00386A01	15	I/O Encl.	3315/3316/ 3317/3318	Signal
21D00386A11	15	I/O Encl.	3355/3356/ 3357/3358	Signal
21D00386A21	15	I/O Encl.	3353	Signal
21D00388A01	8	I/O Encl.	3325	Signal
21D00437A11	6	I/O Encl.	Disconnect Panel	Signal
21D00437A11	6	I/O Encl.	Disconnect Panel	Signal
21D00467A01	15	I/O Encl.	3314	Signal
21D00478A01	4	I/O Encl.	Disk Panel	Signal
21D00486A01	8	I/O Encl.	3342	Signal
21D00522A01	-	I/O Encl.	21D00523A01	Cable Adapter
21D00523A01	6	Cable Adapter	3349	Signal

* Century Data Part Number
** Caelus Memory Part Number

4.2.3 AC Power Distribution Panel

There are two ways of distributing AC power to the elements of the system: each element may be plugged into an AC outlet strip that is connected to the AC power source or they may be plugged into one or more interconnected junction boxes. The former arrangement normally requires power to be turned off/on each unit with every required power-down/power-up. The latter arrangement permits power distribution to the entire system to be controlled from onc control switch.

The "AC outlet strip implementation" can be used by ordering General Automation's Model 1910 System Enclosure (Figure 4-1), which includes an eight-outlet strip.

The "junction box implementation" can be used by ordering a Model 1901 System Enclosure, which includes a twelve-outlet Model 1911 Main AC Power Distribution Panel. A front view of this panel is shown in Figure 4-14 and its placement in the 1901 System Enclosure is illustrated in Figure 4-15.

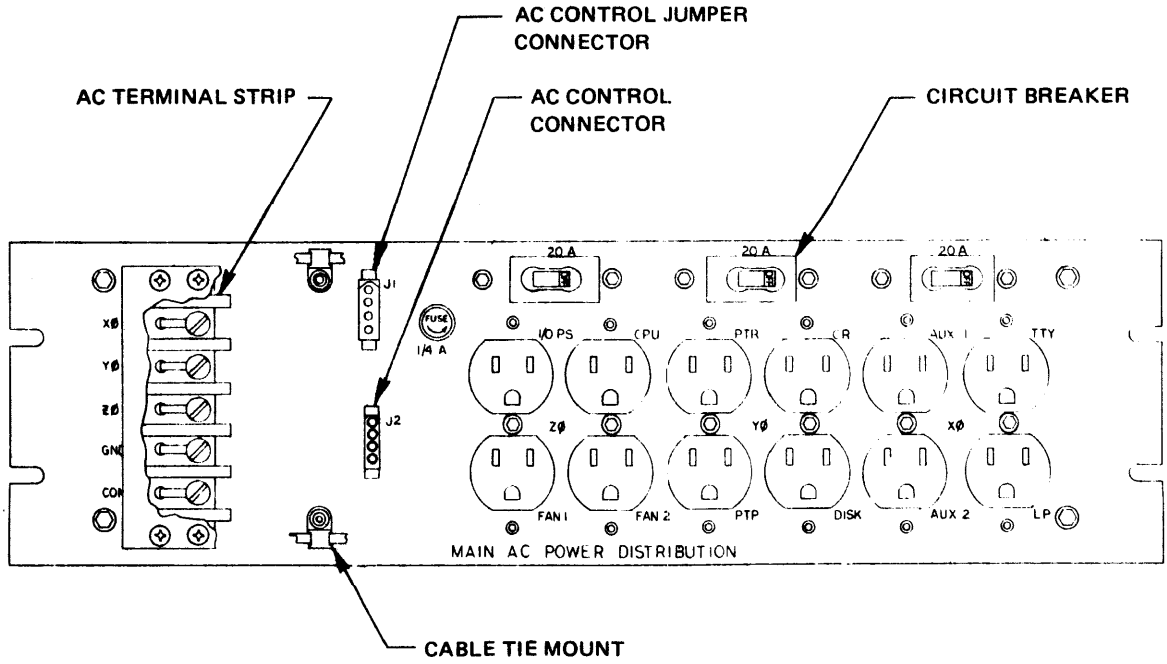

Figure 4-14. Main AC Power Distribution Panel Model 1911 - 1000, -2000

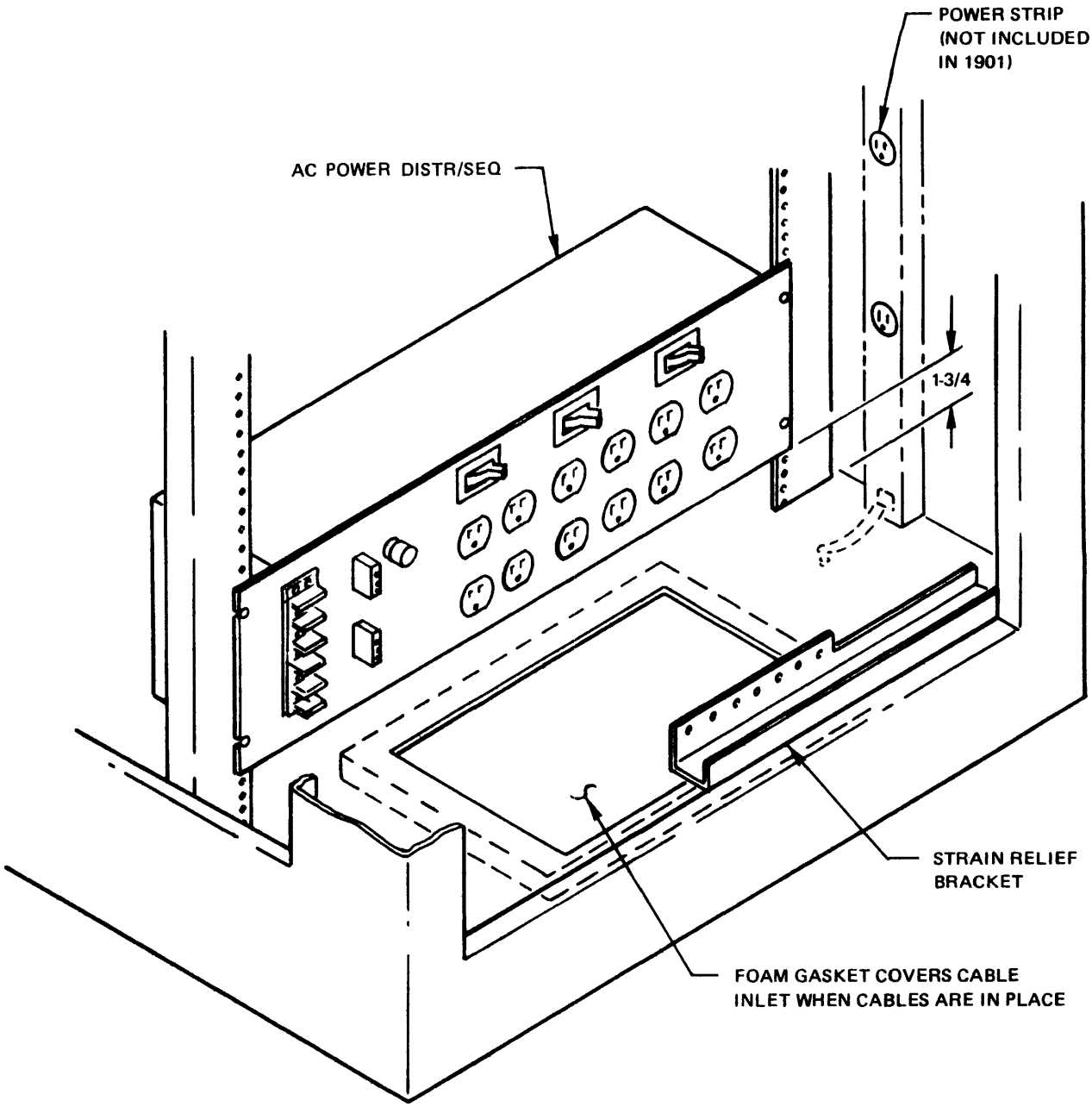

Figure 4-15. Installation of Main AC Power Distribution Panel
In Model 1901 System Enclosure

The panel provides a terminal strip to which the AC power source line is connected, twelve 3-prong AC outlets for connection of the basic system and peripheral units and two AC control connectors. Two models are available:

- o Model 1911 - 1000 provides 115 volts at each outlet and is used for domestic applications;
- o Model 1911 - 2000 provides 220 volts at each outlet and is used for European applications.

The applicable AC power sources are described in Section 2.2.

The reader should note that the outlets on the Main AC Power Distribution Panel can accommodate up to ten units in addition to the I/O Power Supply and CPU Power Supply. If the system includes more than this number of peripheral units, an Auxiliary AC Power Distribution Panel (discussed later in this section) is required. Further, if the system includes between one and four Model 3341 or 3343 Disk Drives, a Disk Interface/Distribution Panel (discussed in Section 4.3.9) is required.

When the circuit breakers are turned on, AC power to the Main AC Power Distribution Panel outlets is controlled by a switch on the AC Power Distribution Switch Panel. A switch panel is supplied with each Model 1901 System Enclosure obtained from General Automation. There are three types of switch panels for use with an SPC-16 system, as shown in Figure 4-16; the type supplied is determined by the user's application. An S1-only Switch Panel is supplied with systems having no Card Punch that are ordered with a 1901 System Enclosure. An S1-and-S2 Switch Panel is supplied with systems including a Card Punch that are ordered with a 1901 System Enclosure; the S2 switch permits the Card Punch to be utilized without powering-on the entire system. An S2-only Switch Panel is supplied with systems including a Card Punch that is ordered with a 1901 System Enclosure.

If only the Main AC Power Distribution Panel is required, the procedure to connect the Panel to the system is as follows:

1. Remove protective cover place from AC terminal strip.
2. Connect main AC power cable to the terminal strip, as color-coded below:

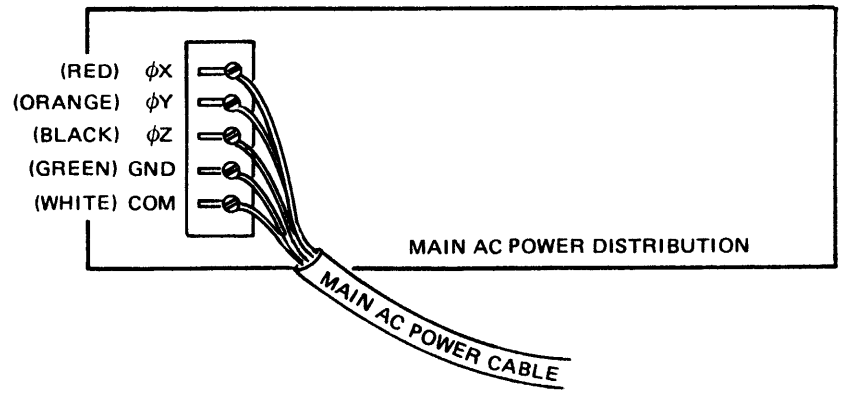

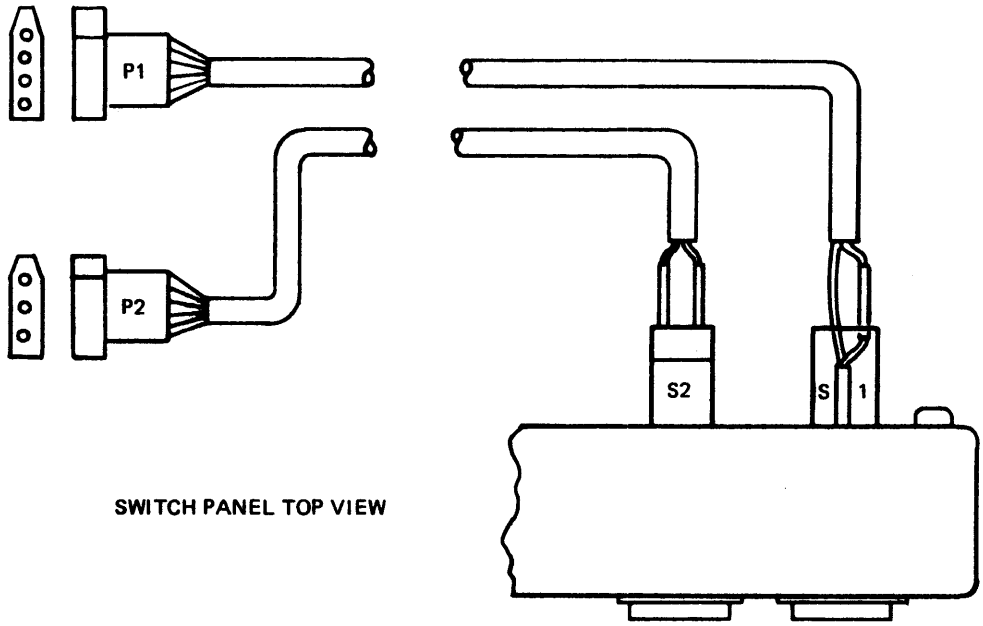

SWITCH PANEL TOP VIEW

SYSTEM POWER SWITCH PANEL
(PART NO. 13D00264A01)

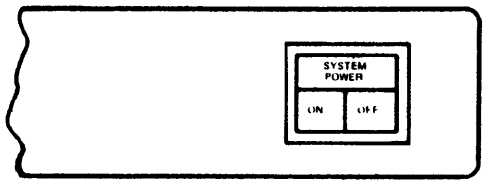

SWITCH S1 ONLY

SYSTEM POWER/CARD PUNCH
SWITCH PANEL
(PART NO. 13D00264A11)

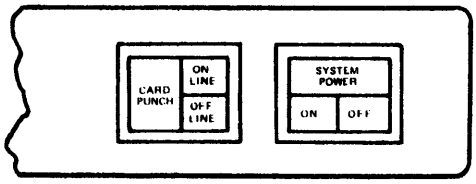

SWITCHES S1 & S2

CARD PUNCH SWITCH PANEL
(PART NO. 13D00264A41)

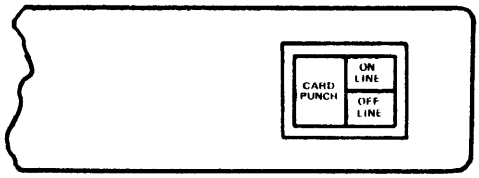

SWITCH S2 ONLY

Figure 4-16. AC Power Distribution Switch Panels

3. Tie-rap wires of the main power cable to the Distribution Panel.

4. Re-attach protective cover plate to AC terminal strip.

5. Connect power switch control plug P1 to J2 on Main AC Power Distribution Panel.

At this point, the connections shown in Figure 4-17 have been made.

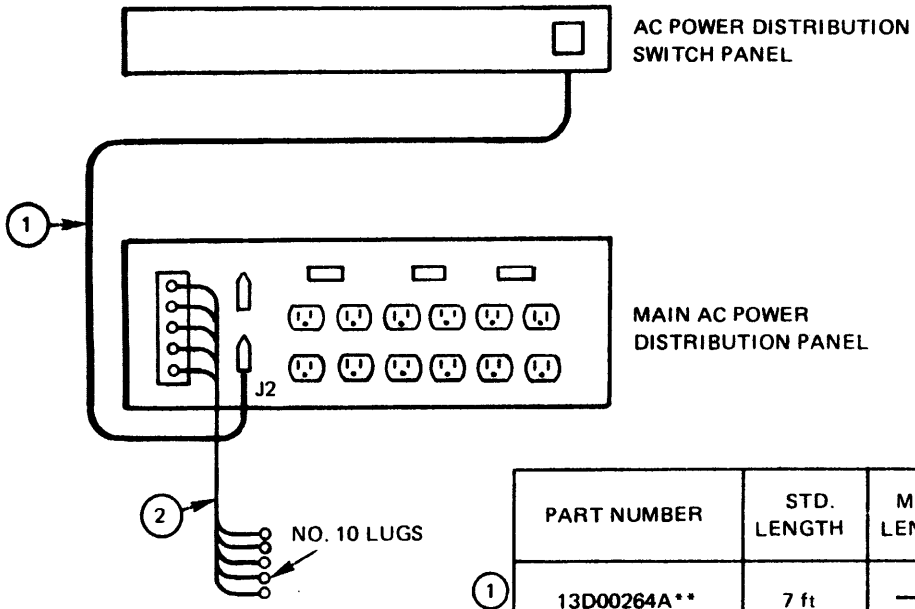

	PART NUMBER	STD. LENGTH	MAX. LENGTH	FUNCTION
1	13D00264A**	7 ft	—	POWER SWITCH
2	21C00485A01	25 ft	—	AC POWER

** = 01 or 11 (SEE FIGURE 4-16)

Figure 4-17. Cabling, Main AC Power Distribution Panel

6. Turn on circuit breakers. Check each outlet for proper voltage before connecting any devices.

7. Connect AC Power plugs from Processor Power Supply and I/O Power Supply, if applicable, into top leftmost outlets of Main AC Power Distribution Panel.

8. Connect plugs from applicable peripheral units (see Section 4.3) into appropriate outlets of Main AC Power Distribution Panel.

9. Connect main AC power cable to AC power source.

Figure 4-18 shows a front view of the Auxiliary AC Power Distribution Panel.

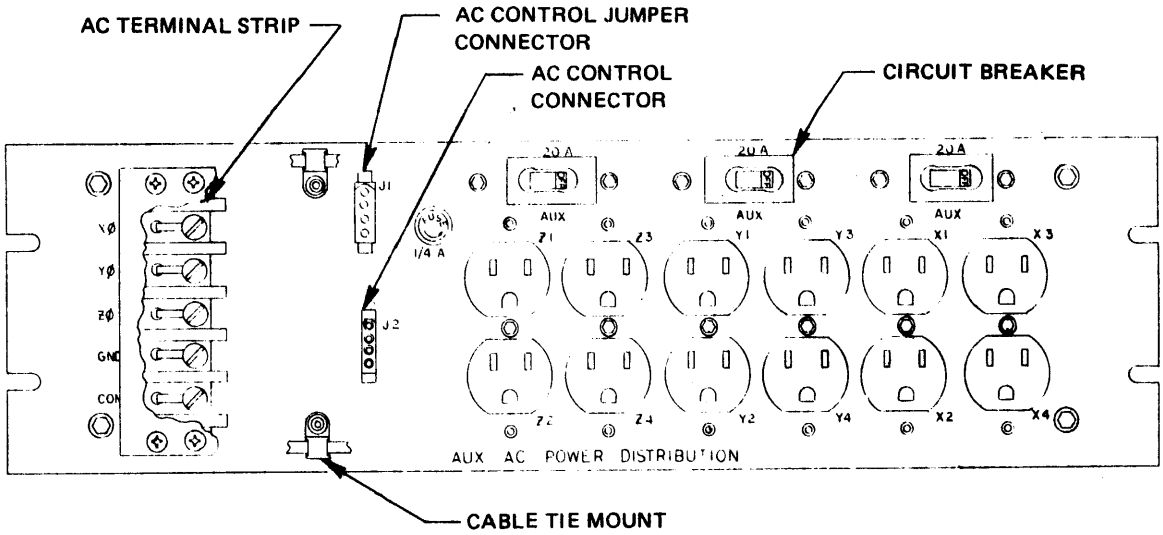

Figure 4-18. Auxiliary AC Power Distribution Panel Model 1911 - 1001, -2001

The panel includes a terminal strip that provides power connection between the Auxiliary Panel and the Main Panel, twelve 3-prong AC outlets to accommodate peripheral units not serviced by the Main Panel, and two AC control connectors. Two models are available:

- Model 1911 - 1001 provides 115 volts at each outlet and is used for domestic applications.
- Model 1911 - 2001 provides 220 volts at each outlet and is used for European applications.

If the Auxiliary AC Power Distribution Panel is required, the procedure to connect both Main Panel and Auxiliary Panel to the system is as follows:

1. Remove protective cover plate from AC terminal strips on both the Main and Auxiliary Panels.
2. Connect AC power cable and one end of the power jumper cable to Main Panel terminal strip and the other end of the power jumper cable to the Auxiliary Panel terminal strip, as color-coded below:

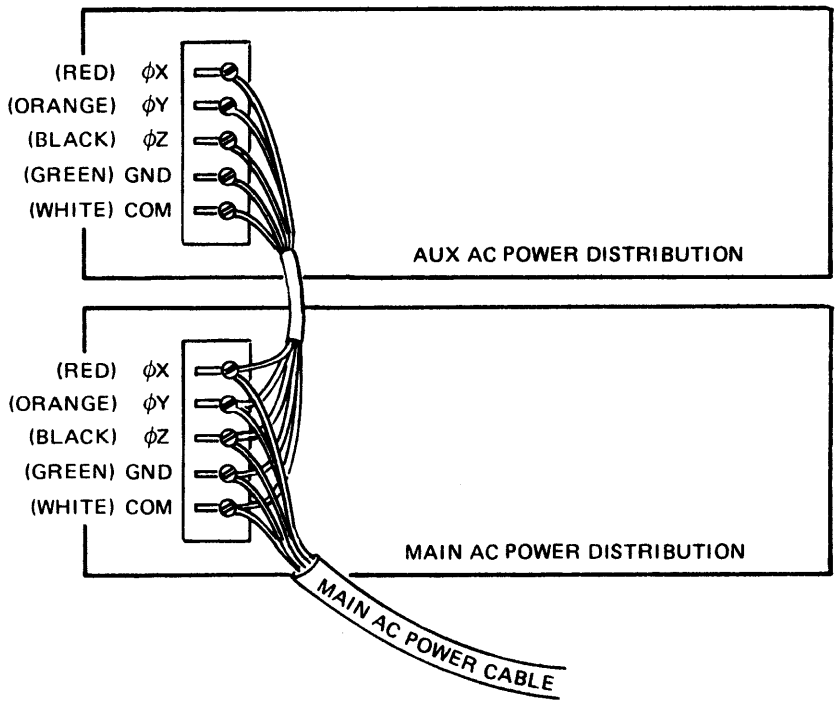

3. Tie-rap wires of main power cable and power connection cable.

4. Reattach protective cover plates to terminal strips.

5. Connect power switch control plug P1 to J2 on Main AC Power Distribution Panel.

6. Connect AC power control jumper cable from J1 on Main Panel to J2 on Auxiliary Panel.

At this point, the connections shown in Figure 4-19 have been made.

7. Turn on circuit breakers. Check each outlet for proper voltage before connecting any devices.

8. Connect AC power plugs from Processor Power Supply and I/O Power Supply, if applicable, to top leftmost outlets of Main AC Power Distribution Panel.

9. Connect plugs from applicable peripheral units (see Section 4.3) into appropriate outlets of Main Panel and Auxiliary Panel.

10. Connect main AC power cable to AC power source.

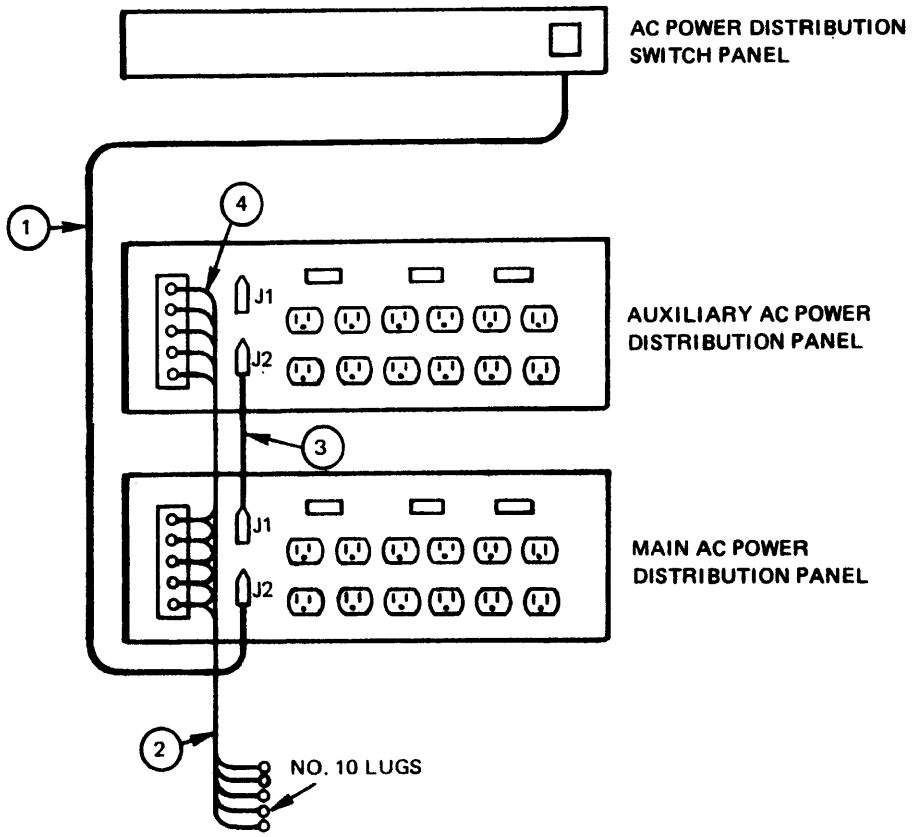

	PART NUMBER	STD. LENGTH	MAX. LENGTH	FUNCTION
1	13D00264A**	7 ft	——	POWER SWITCH
2	21C00485A01	25 ft	——	AC POWER
3	21C00479A**	25 ft	25 FT.	AC CONTROL
4	21C00484A**	25 ft	——	AC INTERCONNECT

** = 01 or 11 (SEE FIGURE 4-16)

Figure 4-19. Cabling, Main AC Power

4.3 PERIPHERAL UNITS

This section presents outline drawings and cabling diagrams for each of the standard peripheral units that can be purchased from General Automation. The order of presentation is as follows:

- Section 4.3.1 describes the Card Punch, Model 3314.
- Section 4.3.2 describes the Card Reader, Models 3315 through 3318.
- Section 4.3.3 describes the Paper Tape Reader, Model 3321.
- Section 4.3.4 describes the Paper Tape Punch, Model 3322.
- Section 4.3.5 describes the Paper Tape Reader and Paper Tape Punch with a common controller, Model 3323.
- Section 4.3.6 describes the Paper Tape Reader/Punch combination, Model 3325.
- Section 4.3.7 describes the 9-Track Magnetic Tape Unit, Models 3331 through 3333.
- Section 4.3.8 describes the 7-Track Magnetic Tape Unit, Models 3334 through 3336.
- Section 4.3.9 describes the Model 3341 and 3343 Disk Drive and the Disk Power Distribution Panel.
- Section 4.3.10 describes the Head Per Track Storage Drive, Model 3342.
- Section 4.3.11 describes the Model 3346 and 3347 Disk Drive.
- Section 4.3.12 describes the "Floppy" Disk Storage System, Model 3349.
- Section 4.3.13 describes the Line Printer, Model 3353.
- Section 4.3.14 describes the Line Printer and Card Reader with a common controller, Models 3355 through 3358.
- Section 4.3.15 describes the Console Teletype, Models 3362 and 3363.

All three-prong AC plugs shown in the cable diagrams in this section are plugged into the Main AC Power Distribution Panel or Auxiliary AC Power Distribution Panel (if applicable).

NOTE

Specific installation instructions for each of the peripheral units may be obtained from their respective vendor peripheral document(s), referenced herein.

4.3.1 3314 Card Punch

General Automation offers a card punching system that produces and verifies standard 80-column EIA punched cards at a rate of 35 cards per minute. In addition to the basic punching and verification capability, an optional interpreter function is available. The unit can, therefore, be purchased to perform only as a keypunch and a verifier (as Model 3314 - 1001), or it can be purchased to perform additionally as a printing punch, a printing verifier and an interpreter (as Model 3314 - 1000).

Each of the above models is supplied with a one-card controller.

The drawing below shows the major dimensions of the 3314 Card Punch.

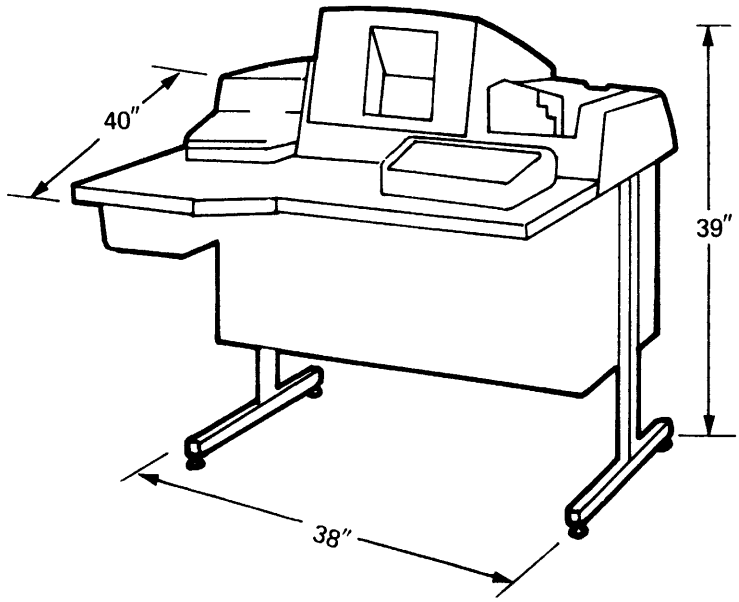

Figure 4-20 illustrates cabling required to connect the Card Punch to the SPC-16 System. The ground strap, if included, should be connected to a convenient point on the System Enclosure.

Applicable vendor manuals: Univac Punch Type 1710 servicing documents and Operators Manual.

4.3.2 3315/3316/3317/3318 Card Reader

General Automation offers card reading systems that read 80-column EIA punched cards at the following rates:

- Model 3315 reads 300 cards per minute.
- Model 3316 reads 400 cards per minute.
- Model 3317 reads 600 cards per minute.
- Model 3318 reads 1,000 cards per minute.

The Card Reader controller supplied with each of the above models utilizes one card slot, but is logically located on one-half card. The Card Reader may be combined with a Line Printer (Section 4.3.13) to operate through a common one-card controller, as described in Section 4.3.14.

The drawings below show the major dimensions of the four Card Reader models.

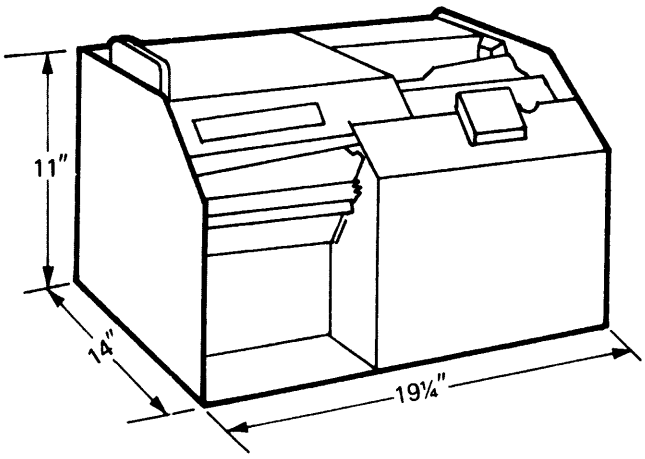

3315 CARD READER

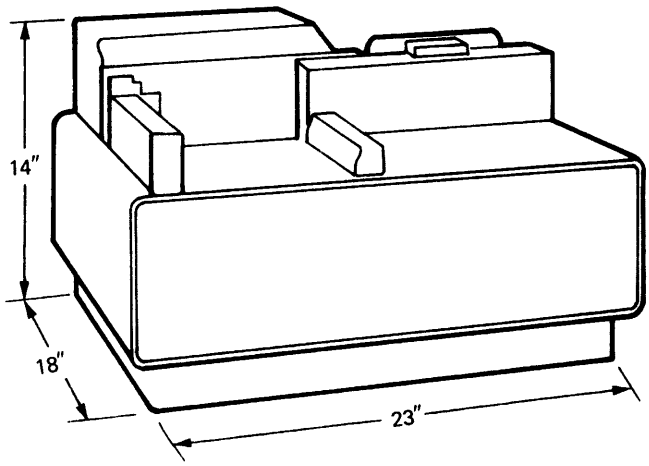

3316/3317/3318 CARD READERS

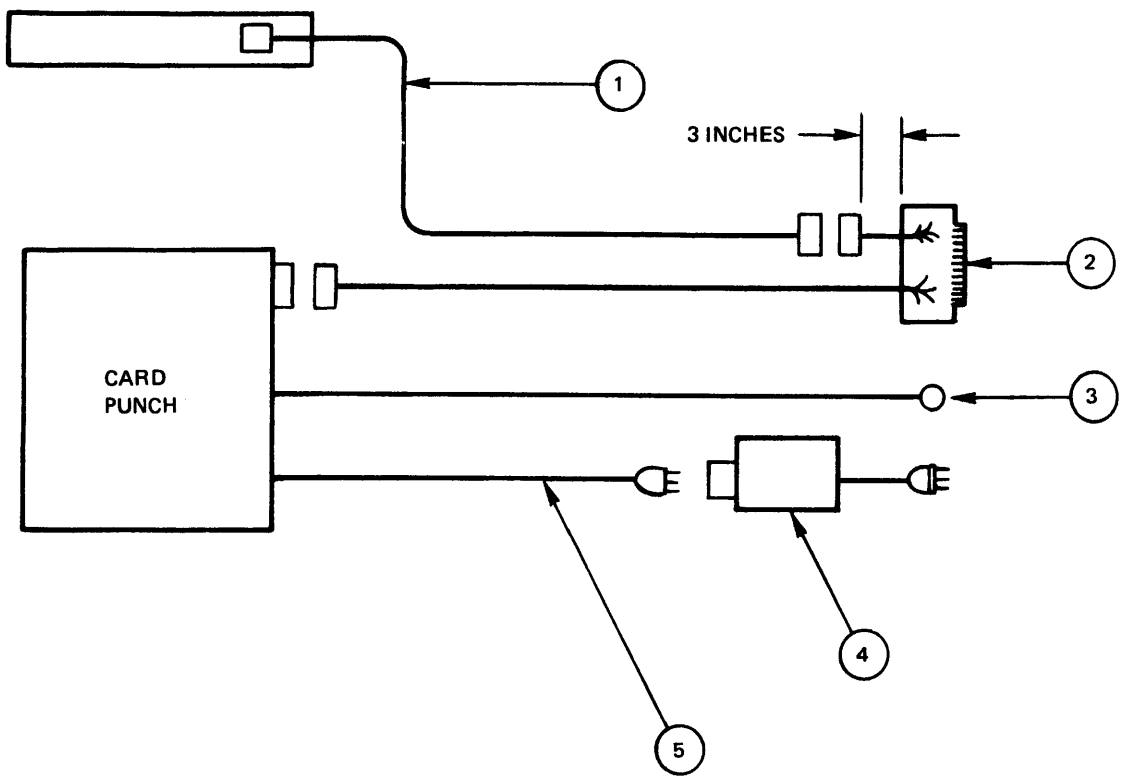

	PART NUMBER	STD. LENGTH	MAX. LENGTH	FUNCTION
①	13D00264A**	6 ft	—	ON LINE/OFF LINE SWITCHING PANEL
②	21D00467A15	15 ft	25 ft	SIGNAL
③	ATTACHED TO CP	15 ft	—	GROUND STRAP
④	10A00029A01	2 ft	—	LINE FILTER
⑤	ATTACHED TO CP	8 ft	—	AC POWER

** = 11 or 41 (SEE FIGURE 4-16)

Figure 4-20. Cable Diagram, 3314 Card Punch

Figure 4-21 illustrates the cabling required to connect the Card Reader to the SPC-16 system.

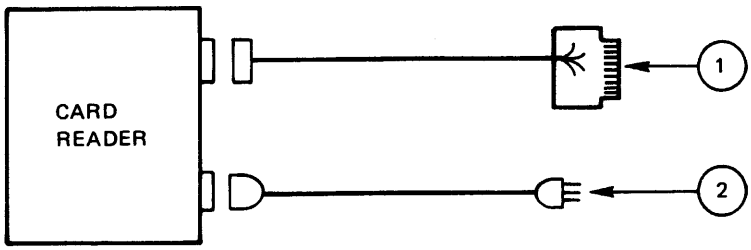

	PART NUMBER	STD. LENGTH	MAX. LENGTH	FUNCTION
1	21D00386A01	15 ft	25 ft	SIGNAL
2	SUPPLIED WITH CR	8 ft	—	AC POWER

Figure 4-21. Cable Diagram, 3315/3316/3317/3318 Card Reader

Applicable vendor manuals:

Documation M200 Card Reader Manual (for 3315)
Documation M400 Card Reader Manual (for 3316)
Documation M600 Card Reader Manual (for 3317)
Documation M1000 Card Reader Manual (for 3318)

4.3.3 3321 Paper Tape Reader

General Automation offers a paper tape reading system that can read up to 400 characters per second. In addition to the basic reader configuration, optional fan fold and spooled tape configurations are available. The basic Paper Tape Reader is sold as Model 3321 - 1000; the Reader with fan fold option is Model 3321 - 1010; the Reader with spooler option is Model 3321 - 1020.

The Paper Tape Reader controller supplied with each of the above models utilizes one card slot, but is logically located on one-half card. The Paper Tape Reader may be combined with a Paper Tape Punch, (Section 4.3.4), to operate through a common one-card controller, as described in Section 4.3.5.

The drawing below shows the frontal dimensions of the 3321 Paper Tape Reader with and without the above options. All models of the 3321 are designed to be mounted in a standard 1901 or 1910 System Enclosure.

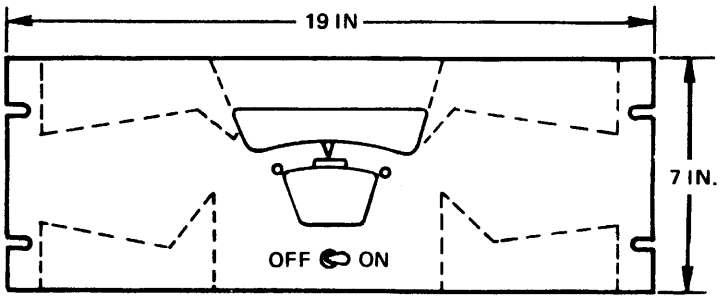

BASIC 3321 PAPER TAPE READER (FAN FOLD OPTION SHOWN WITH DASHED LINES)

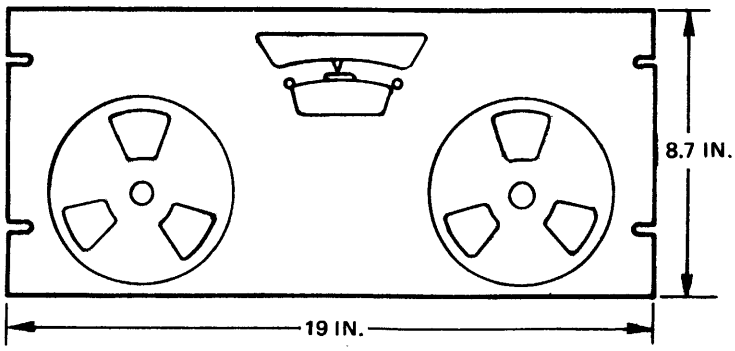

3321 PAPER TAPE READER WITH SPOOLER OPTION

Figure 4-22 illustrates cabling required to connect the Paper Tape Reader to the SPC-16 system.

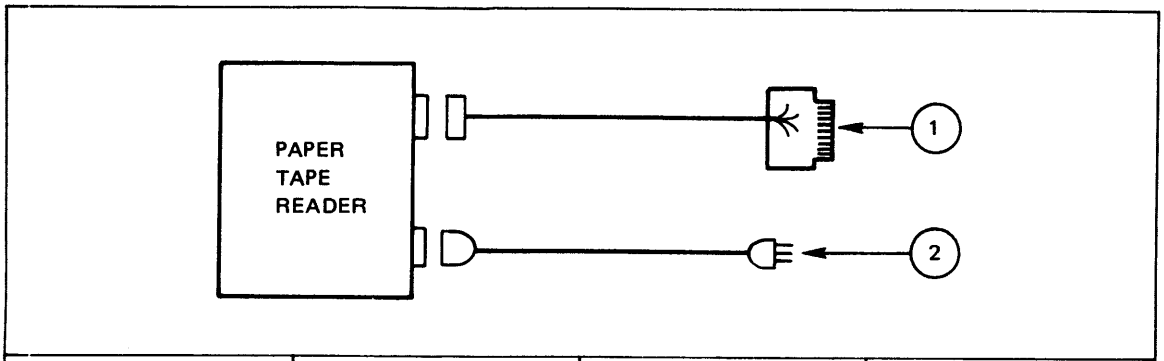

	PART NUMBER	STD. LENGTH	MAX. LENGTH	FUNCTION
①	21D00349A01	8 ft	25 ft	SIGNAL
②	SUPPLIED WITH PTR	10 ft	—	AC POWER

Figure 4-22. Cable Diagram, 3321 Paper Tape Reader

Applicable vendor manuals:

Remex Technical Manual for Model RR-3000 BB/LB/RB (basic reader or reader with fan-fold option)

Remex Technical Manual for Model RRS-3401 BAS/XX4/DRA (for reader with spooler option)

4.3.4 3322 Paper Tape Punch

General Automation offers a paper tape punching system that can punch up to 75 characters per second. In addition to the basic punch configuration, optional fan fold and spooled tape configurations are available. The basic Paper Tape Punch is sold as Model 1322 - 1000; the Punch with fan fold option is Model 1322 - 1010; the Punch with spooler option is Model 1322 - 1020.

The Paper Tape Punch controller supplied with each of the above models utilizes one card slot, but is logically located on one-half card. The Paper Tape Punch may be combined with a Paper Tape Reader (Section 4.3.3) to operate through a common one-card controller, as described in Section 4.3.5.

The drawing below shows the frontal dimensions of the 3322 Paper Tape Punch, basic configuration. The optional models have the same dimensions. All models of the 3322 are designed to be mounted in a standard 1901 or 1910 System Enclosure.

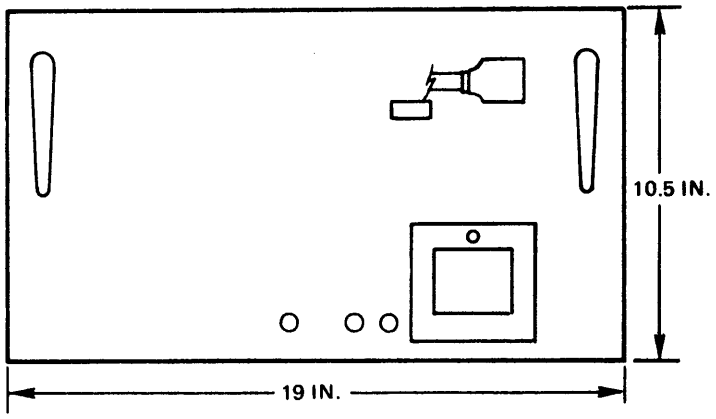

Figure 4-23 illustrates the cabling required to connect the Paper Tape Punch to the SPC-16 system.

Applicable vendor manuals:

Remex Tape Performator System, Model PRP 1075 BAX
Remex Punch Mech., Model RPM 1075 BBX

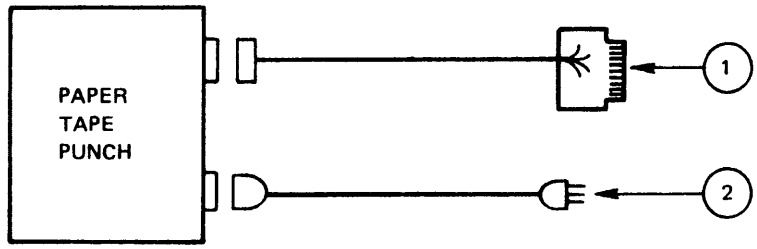

	PART NUMBER	STD. LENGTH	MAX. LENGTH	FUNCTION
①	21D00349A21	8 ft	25 ft	SIGNAL
②	SUPPLIED WITH PTP	10 ft	—	AC POWER

Figure 4-23. Cable Diagram, 3322 Paper Tape Punch

4.3.5 3323 Paper Tape Reader and Paper Tape Punch

For users requiring both a 3321 Paper Tape Reader (Section 4.3.3) and a 3322 Paper Tape Punch (Section 4.3.4), General Automation offers a Model 3323 Paper Tape Reader and Paper Tape Punch pair, which is comprised of the two former units implemented with a common one-card controller. The basic Reader and Punch pair is sold as Model 3323 - 1000; the pair with fan fold option is Model 3323 - 1010; the pair with spooler option is Model 3323 - 1020.

The dimensions of the Paper Tape Reader are as shown in Section 4.3.3; the dimensions of the Paper Tape Punch are as shown in Section 4.3.4.

Figure 4-24 illustrates the cabling required to connect the Paper Tape Reader and Paper Tape Punch pair to the SPC-16 system.

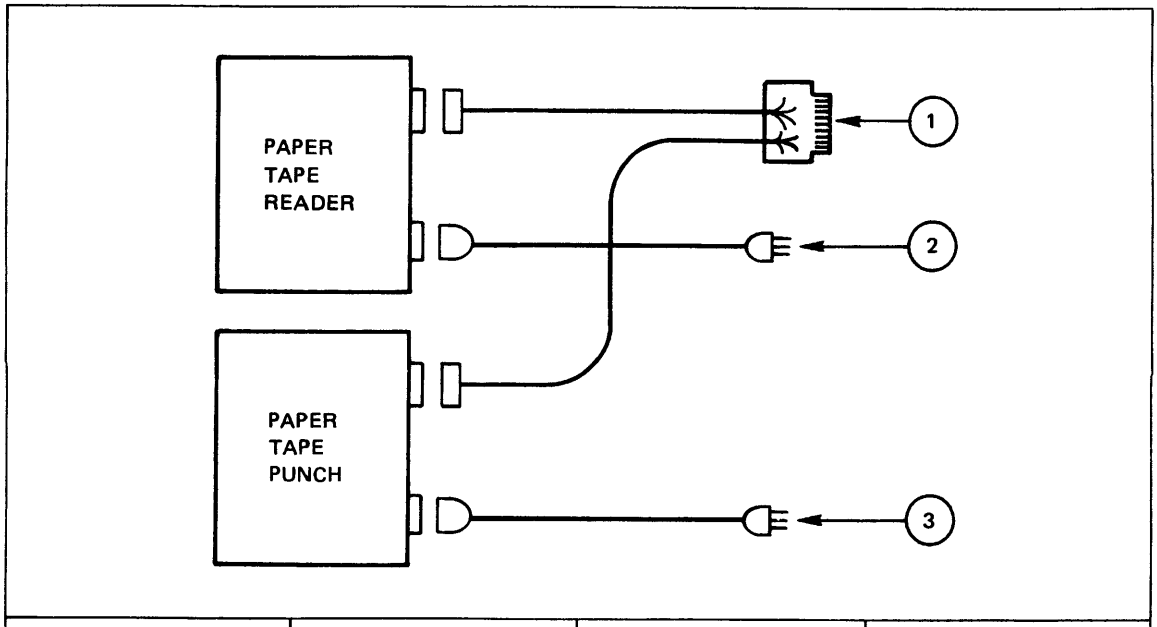

	PART NUMBER	STD. LENGTH	MAX. LENGTH	FUNCTION
①	21D00349A11	8 ft	25 ft	SIGNAL
②	SUPPLIED WITH PTR	10 ft	——	AC POWER
③	SUPPLIED WITH PTP	10 ft	——	AC POWER

Figure 4-24. Cable Diagram, 3323 Paper Tape Reader and Paper Tape Punch

4.3.6 3325 Combination Paper Tape Reader/Punch

General Automation offers a combination Paper Tape Reader/Punch unit, Model 3325, that can read up to 300 characters per second and punch up to 75 characters per second. In addition to the basic read/punch configuration, an optional fan fold configuration is available. The basic Paper Tape Reader/Punch is sold as Model 3325 - 1000; the unit with fan fold option is sold as Model 3325 - 1010.

Each of the above models is supplied with a one-card controller.

The drawing below shows the frontal dimensions of the 3325 Paper Tape Reader/Punch, basic configuration. The optional fan fold model has the same dimensions. Both models of the 3325 are designed to be mounted in a standard 1901 or 1910 System Enclosure.

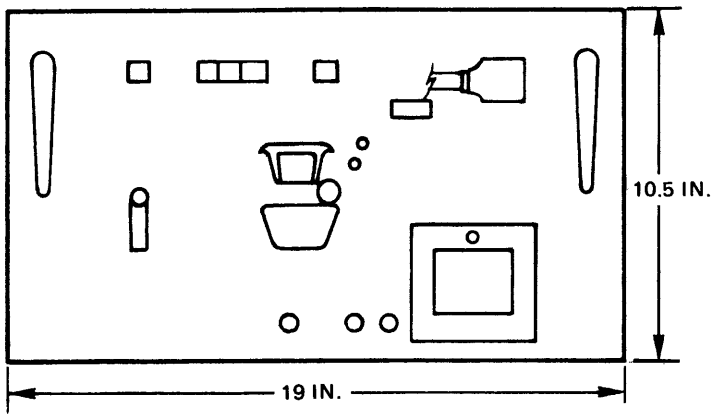

Figure 4-25 illustrates the cabling required to connect the Paper Tape Reader/Punch to the SPC-16 system.

Applicable vendor manual:

Remex Tape Reader/Performator System, Model 3075 BDI

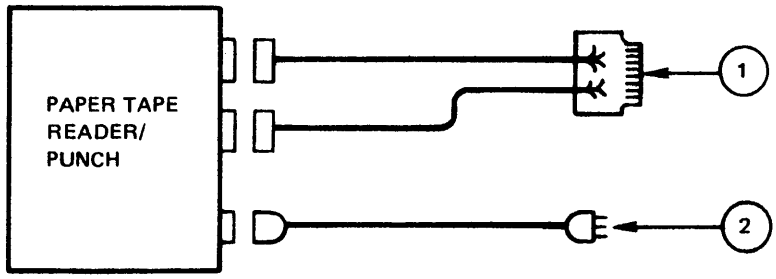

	PART NUMBER	STD. LENGTH	MAX. LENGTH	FUNCTION
1	21D00388A01	8 ft	25 ft	SIGNAL
2	SUPPLIED WITH PTR/PTP	10 ft	—	AC POWER

Figure 4-25. Cable Diagram, 3325 Combination Paper Tape Reader/Paper Tape Punch

4.3.7 3331/3332/3333 9-Track Magnetic Tape Unit

General Automation offers 9-track magnetic tape systems in three speeds:

- o Model 3331 - 1001 has a tape speed of 25-inches per second.
- o Model 3332 - 1001 has a tape speed of 37.5-inches per second.
- o Model 3333 - 1001 has a tape speed of 75-inches per second.

Density is 800 bits per inch on all models.

Each of the above models is supplied with a three-card controller. One controller can support four tape transports, so that when a magnetic tape transport and controller are purchased, up to three additional tape transports can be purchased to operate through the controller. Additional tape transports may be ordered as follows:

- o Model 3331 - 1110: Additional Magnetic Tape Transport (for use with 3331 - 1001).

- o Model 3332 - 1110: Additional Magnetic Tape Transport (for use with 3332 - 1001).

- o Model 3333 - 1110: Additional Magnetic Tape Transport (for use with 3333 - 1001).

The drawing below shows the frontal dimensions of the 3331 Magnetic Tape Unit; the 3332 and 3333 MTU's have the same dimensions. All models are designed to be mounted in a standard 1901 or 1910 System Enclosure.

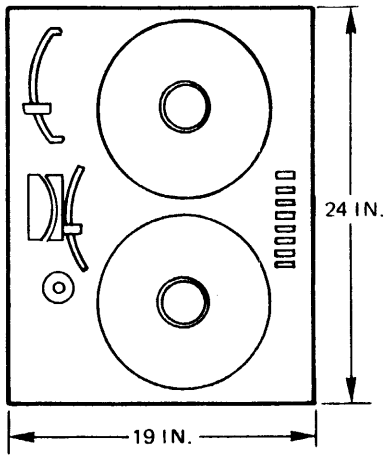

Figure 4-26 illustrates the cabling required to connect the Magnetic Tape Units to the SPC-16 system.

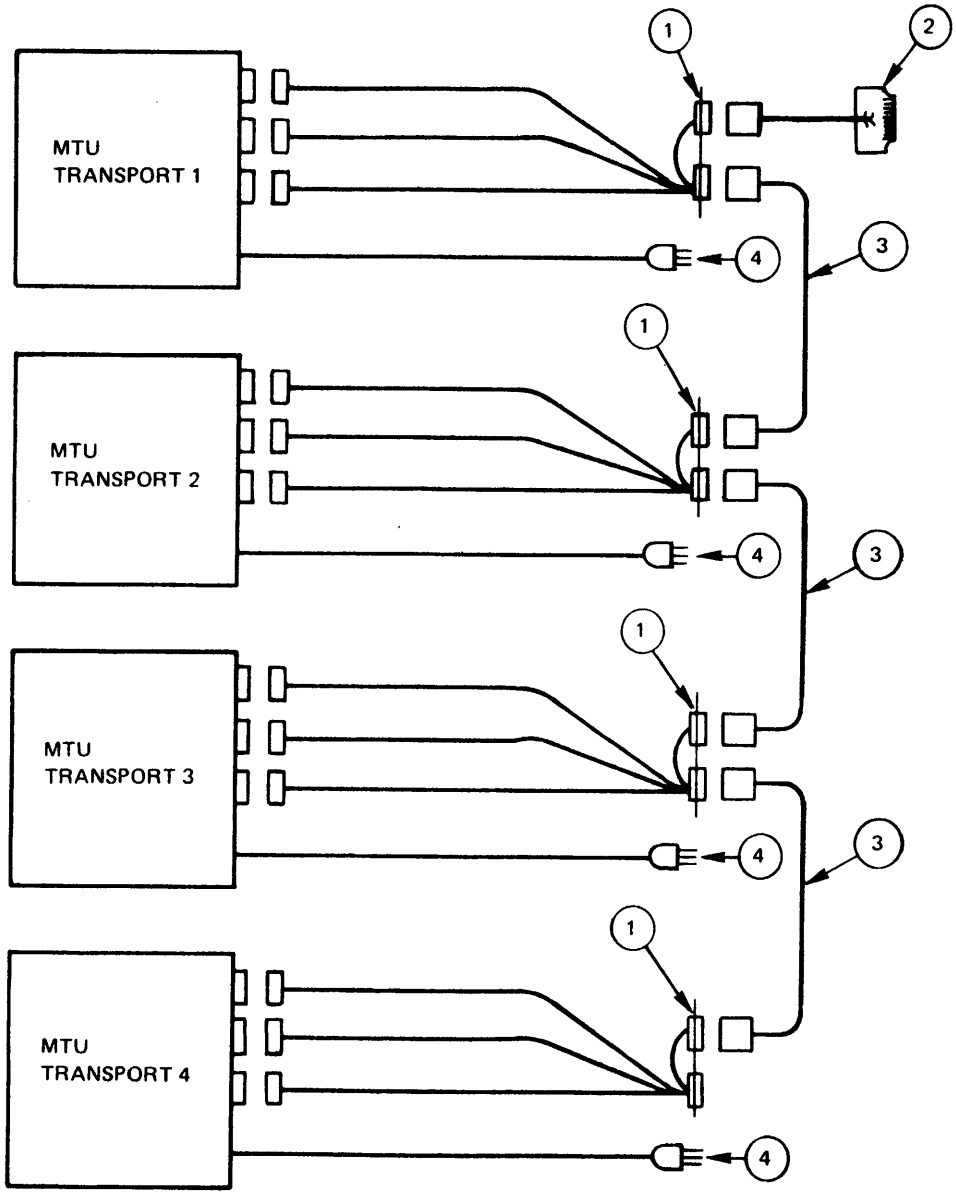

	PART NUMBER	STD. LENGTH	MAX. LENGTH	FUNCTION
1	13D00104A01	4 ft	—	DISCONNECT PANEL*
2	21D00437A11	6 ft	Δ	SIGNAL
3	21D00194A01	6 ft	Δ	SIGNAL
4	ATTACHED TO MTU	7 ft	—	AC POWER

* SEE FIGURE 4-27

Δ COMBINED TOTAL MAXIMUM LENGTH = 50 FEET

Figure 4-26. Cable Diagram, 3331/3332/3333 Magnetic Tape Unit

The MTU Disconnect Panel is shown below in Figure 4-27:

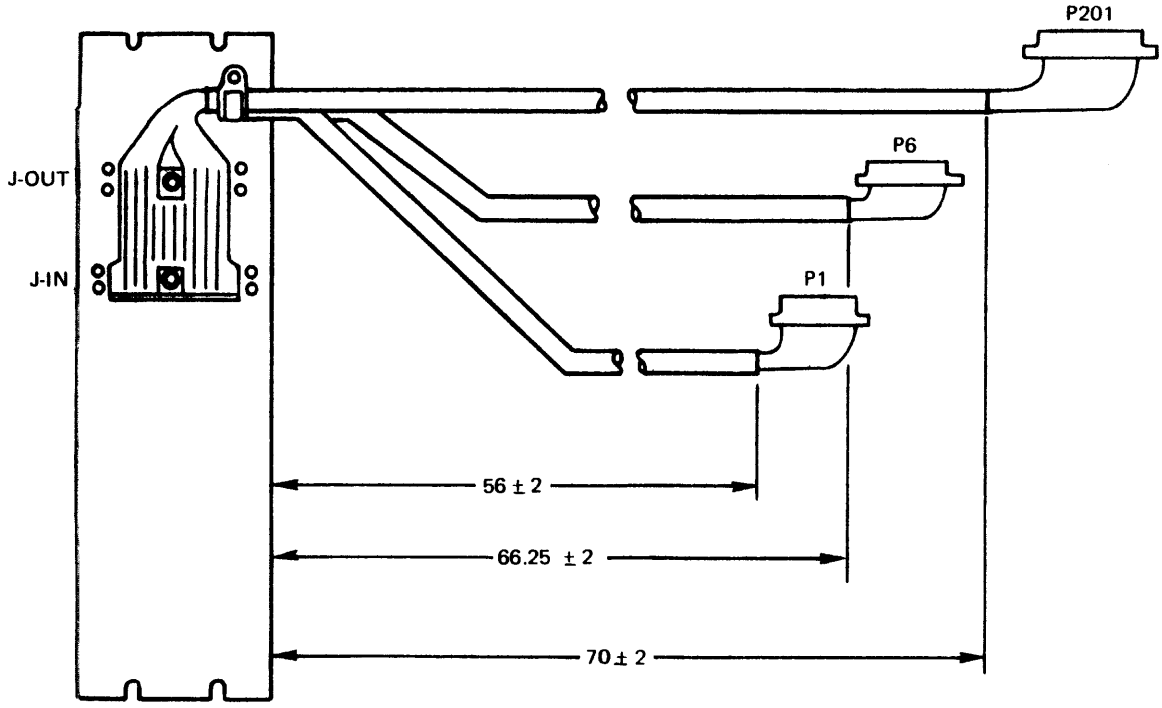

Figure 4-27. MTU Disconnect Panel, Model 1331 and 1332

Applicable vendor manuals:

Wang Magnetic Tape Transport, Model 10 (for 3331 and 3332)
Wang Magnetic Tape Transport, Model 10P (for 3333)

4.3.8 3334/3335/3336 7-Track Magnetic Tape Unit

General Automation offers 7-track magnetic tape systems in three speeds:

- o Model 3334 - 1002 has a tape speed of 25-inches per second.
- o Model 3335 - 1002 has a tape speed of 37.5 inches per second.
- o Model 3336 - 1002 has a tape speed of 75 inches per second.

Each model has a selectable data density of 556 or 800 bits per inch.

Each of the above models is supplied with a three-card controller. One controller can support four tape transports, so that when a magnetic tape transport is purchased, up to three additional tape transports can be purchased to operate through the controller. Additional tape transports may be ordered as follows:

- o Model 3334 - 1112: Additional Magnetic Tape Transport (for use with 3334 - 1002)
- o Model 3335 - 1112: Additional Magnetic Tape Transport (for use with 3335 - 1002)
- o Model 3336 - 1112: Additional Magnetic Tape Transport (for use with 3336 - 1002)

The drawing below shows the frontal dimensions of the 3334 Magnetic Tape Unit; the 3335 and 3336 MTU's have the same dimensions. All models are designed to be mounted in a standard 1901 or 1910 System Enclosure.

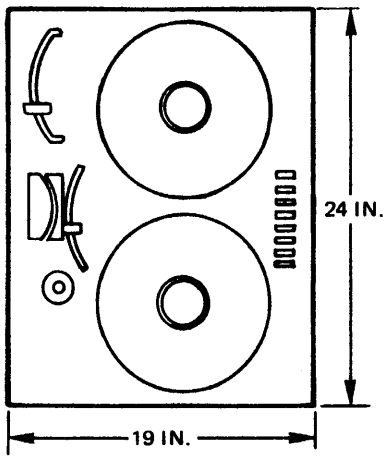

Figure 4-28 illustrates the cabling required to connect the Magnetic Tape Units to the SPC-16 system.

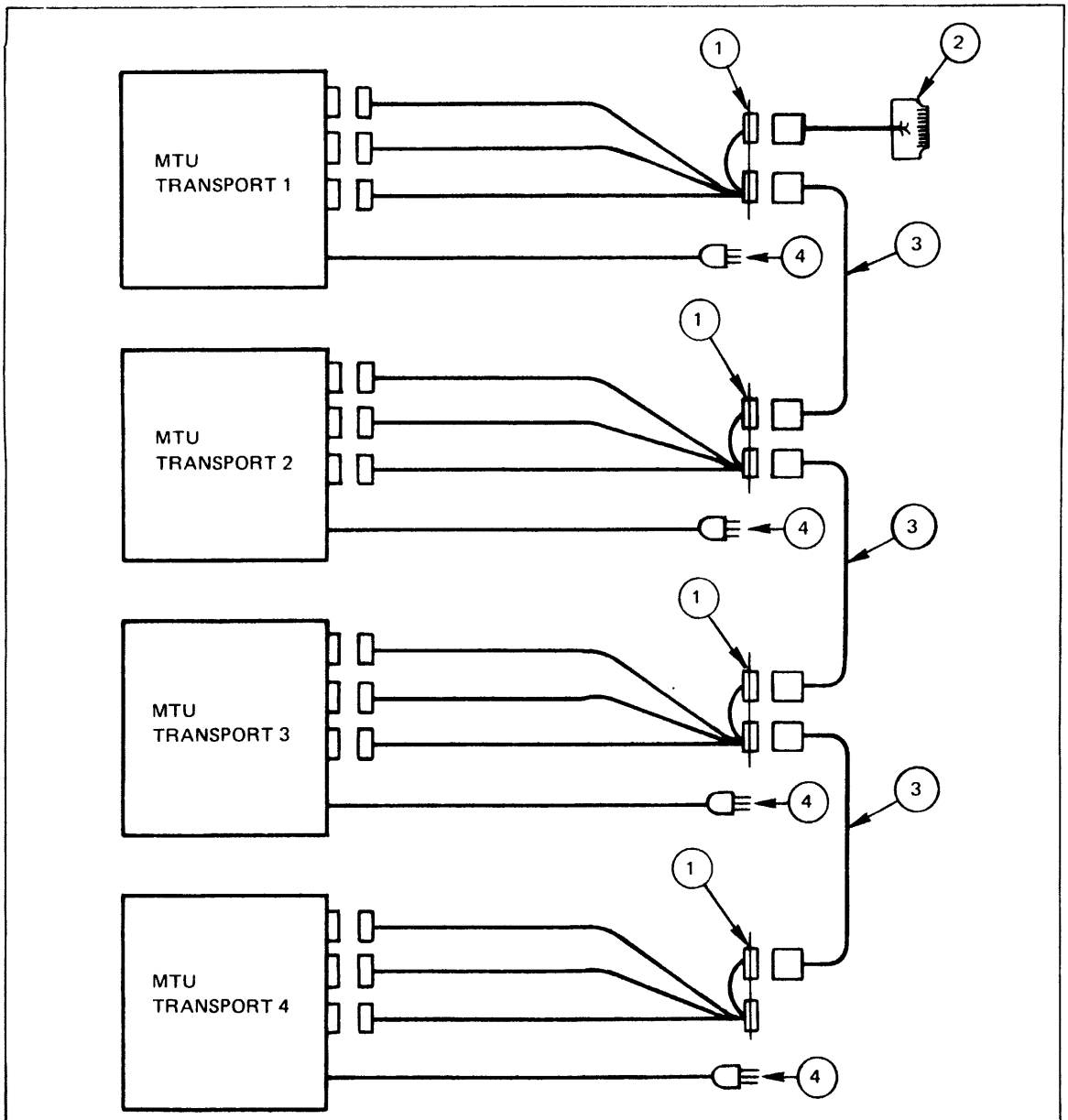

	PART NUMBER	STD. LENGTH	MAX. LENGTH	FUNCTION
①	13D00104A11	4 ft	—	DISCONNECT PANEL *
②	21D00437A11	6 ft	Δ	SIGNAL
③	21D00194A01	6 ft	Δ	SIGNAL
④	ATTACHED TO MTU	7 ft	—	AC POWER

* SEE FIGURE 4-27
Δ COMBINED TOTAL MAXIMUM LENGTH = 50 FT

Figure 4-28. Cable Diagram, 3334/3335/3336 Magnetic Tape Unit

Applicable vendor manuals:

Wang Magnetic Tape Transport, Model 10 (for 3334 and 3335).
Wang Magnetic Tape Transport, Model 10P (for 3336)

4.3.9 3341/3343 Disk Storage Drive

General Automation offers two disk storage systems featuring a high-speed, random access, mass storage disk drive. These systems are as follows:

- Model 3341 - 1010 accommodates up to 3.2 million 16-bit words on 10 recording surfaces of a 6-platter removable disk pack. Data is transferred at a rate of 156000 bytes per second.

- Model 3343 - 1010 accommodates up to 12.8 million 16-bit words on 20 recording surfaces of a 11-platter removable disk pack. Data is transferred at a rate of 312000 bytes per second.

Each of the above models is supplied with a three-card controller. One controller can support four disk storage drives, so that when a disk storage drive and controller are purchased, up to three additional disk storage drives can be purchased to operate through the controller. Additional disk storage drives may be ordered as follows:

- Model 3341 - 1110: Additional Disk Storage Drive (for use with 3341 - 1010).

- Model 3343 - 1110: Additional Disk Storage Drive (for use with 3343 - 1010)

The drawing below shows the major dimensions of the 3341 and 3343 Disk Storage Drives.

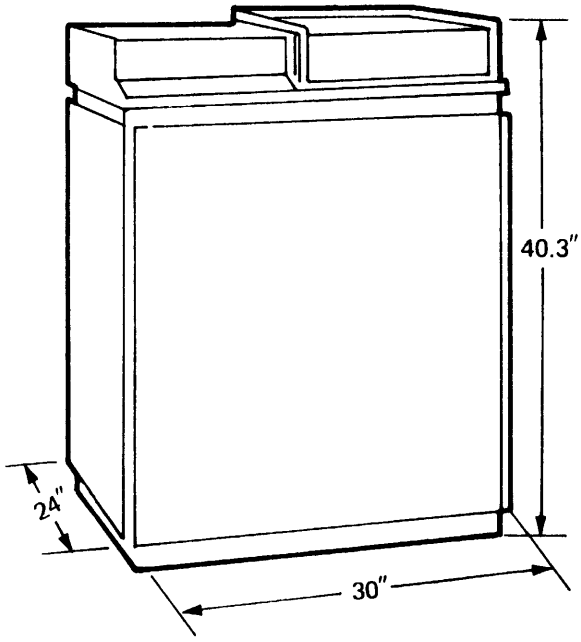

Figure 4-29 illustrates the cabling required to connect four Disk Storage Drives to the SPC-16 system.

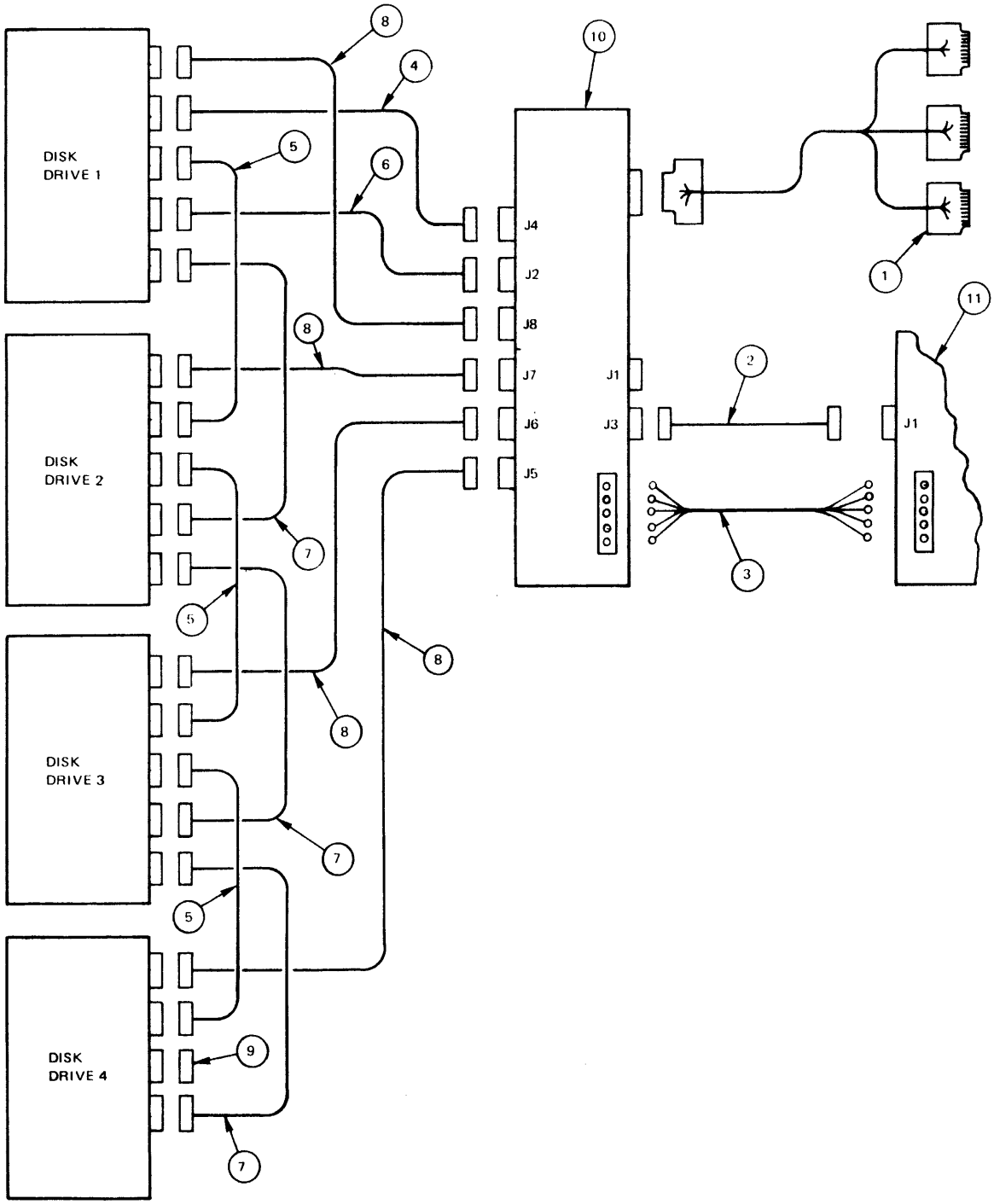

(CONTINUED ON NEXT PAGE)

	PART NUMBER	STANDARD LENGTH	MAXIMUM LENGTH	FUNCTION
1	21D00478A01	4 FT		SIGNAL
2	21C00479A**	1	25 FT	AC CONTROL
3	21C00484A**	1	25	AC POWER
4	90612-025 (Centry Data)	25	△	SIGNAL
5	90612-015 (Century Data)	15	△	SIGNAL
6	90609-025 (Century Data)	25	50	AC POWER
7	90609-015 (Centry Data)	15	50	AC POWER
8	90610-025 (Century Data)	25	50	DC
9	99731-001 (Century Data)	—	—	TERM. SHOE
10	13D00234A**	—	—	DISK INTERFACE/DISTR. PANEL
11	13D00227A** or 13D00226A**	—	—	MAIN AC POWER DISTR. PANEL AUX. AC POWER DISTR. PANEL

△ Combined Total Maximum Length: 100 Ft.
** = 01 (Domestic) or 11 (European)

Figure 4-29. Cable Diagram, 3341/3343 Disk Storage Drive

Applicable vendor manuals:

Century Data Model 111 Technical Manual (for 3341)
Century Data Model 114 Technical Manual (for 3343)

DISK INTERFACE PANEL

When a 3341 or 3343 Disk Storage Drive is ordered, a system enclosure with power sequencing is required. The 1901 System Enclosure provides this sequencing in the Main AC Power Distribution Panel (see Section 3.2.3) and a Disk Interface Panel. Figure 4-30 shows a front view of the Disk Interface Panel.

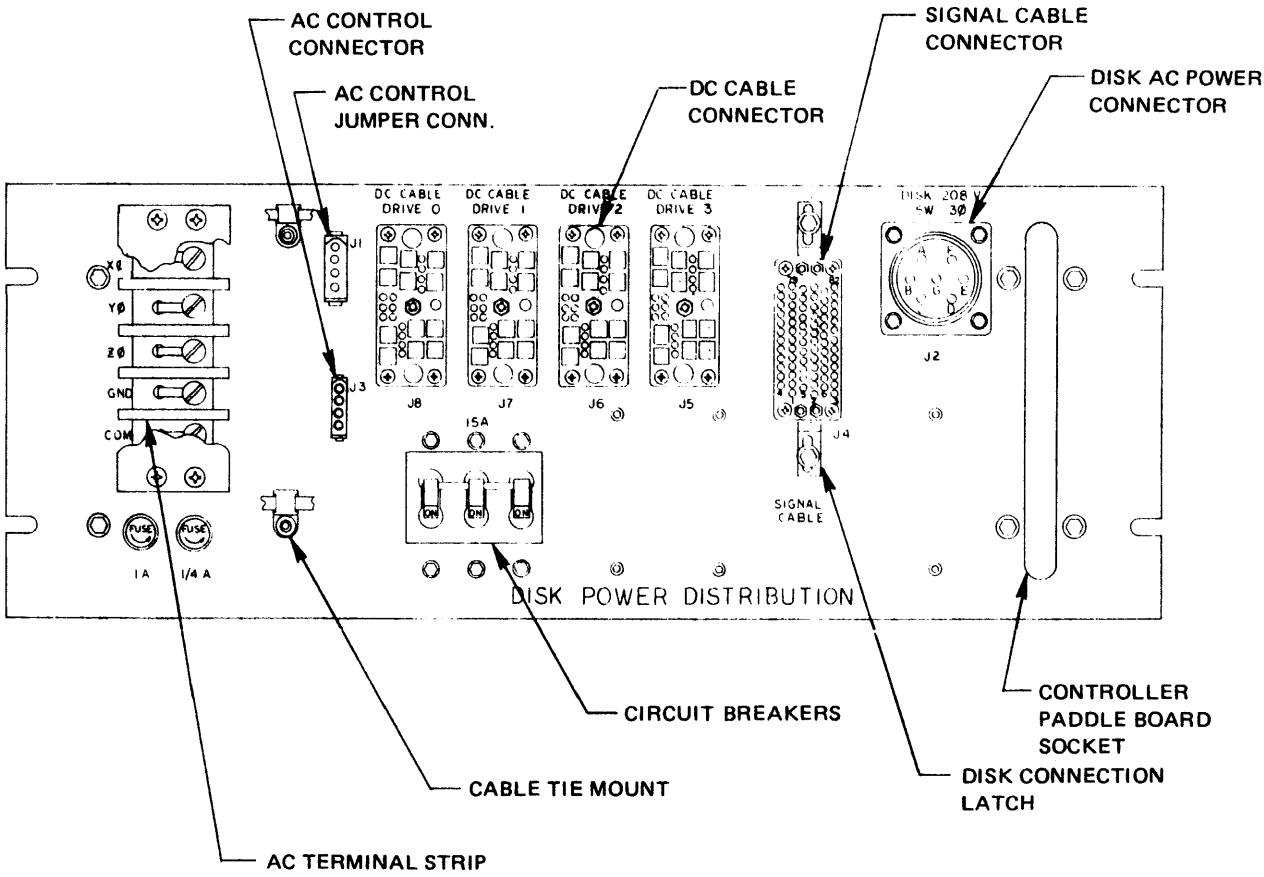

Figure 4-30. Disk Interface Panel - Model 3341/3343 - 1000, -2000

The Disk Interface Panel includes a terminal strip that provides power connection between the Main Panel or Auxiliary Panel and the Disk Panel, four DC cable connectors (one for each Disk Drive), one signal cable connector, two AC control connectors, a disk AC power connector and a controller paddle board socket. Two models are available:

- o Model 3341/3343 - 1000 provides 115 volts at each outlet and is used for domestic applications;
- o Model 3341/3343 - 2000 provides 220 volts at each outlet and is used for European applications.

The Disk Interface Panel must be connected to the Auxiliary AC Power Distribution Panel if the Auxiliary Panel is present; otherwise, it is connected to the Main AC Power Distribution. Following is the procedure to connect the Disk Interface Panel to the applicable Distribution Panel:

1. Disconnect main AC power cable from AC voltage source.
2. Remove protective cover plate from AC terminal strips on both the Disk Interface Panel and the Main or Auxiliary Distribution Panel.
3. Connect one end of power jumper cable to Distribution Panel terminal strip and other end to Disk Interface Panel terminal strip, as color coded below:

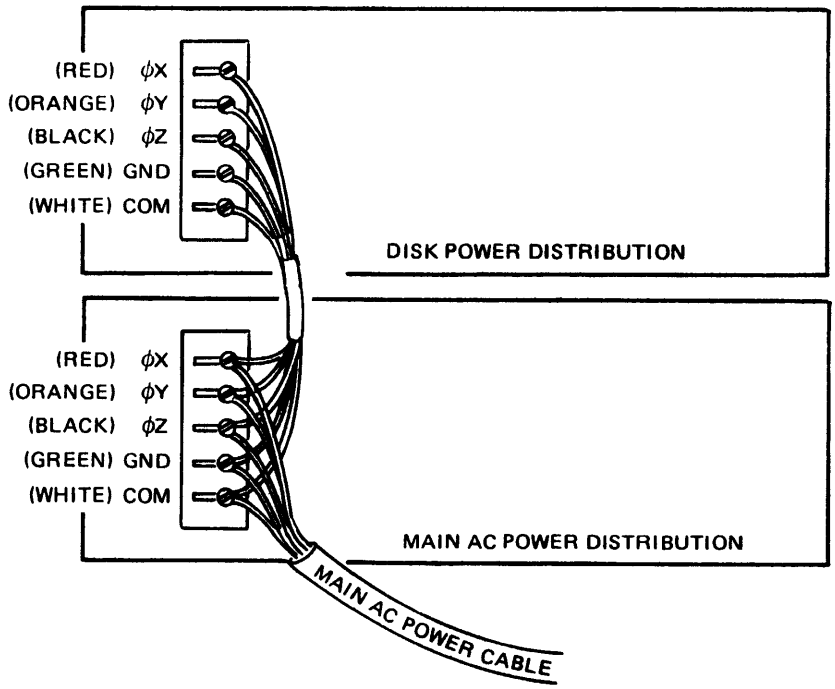

4. Tie-rap wires of power connector cable.

5. Re-attach protective cover plates to terminal strips.

6. Connect Disk DC cables to DC cable connectors J8, J7, J6 and J5, respectively.

7. Connect Disk signal cable to signal cable connector J4 and clamp to chassis.

8. Connect Disk AC power cable to Disk AC power connector J2.

9. Guide controller paddle board into socket with pin number 1 positioned at the top of the Disk Interface Panel. Bolt down board support brace with two 10-32 screws.

10. Connect AC control jumper cable from J1 on Distribution Panel to J3 of Disk Interface Panel.

11. Plug main AC power cable into power source.

12. Turn on circuit breakers.

4.3.10 3342 Head Per Track Storage Drive

General Automation offers a head per track storage system featuring a high-performance, random access disk drive. The drive contains a single, fixed, multi-track disk, each track of which is provided with a dedicated head. The unit can be purchased with a 64-track disk to provide a data storage capacity of 128,000 16-bit words (as Model 3342-1042) or with a 128 track disk to provide a data storage capacity of 256,000 16-bit words (as Model 3342-1044).

Each of the above models is supplied with a two-card controller.

The drawing below shows the frontal dimensions of the 3342 Head Per Track Storage Drive. Both models of the 3342 are designed to be mounted in a standard 1901 or 1910 System Enclosure.

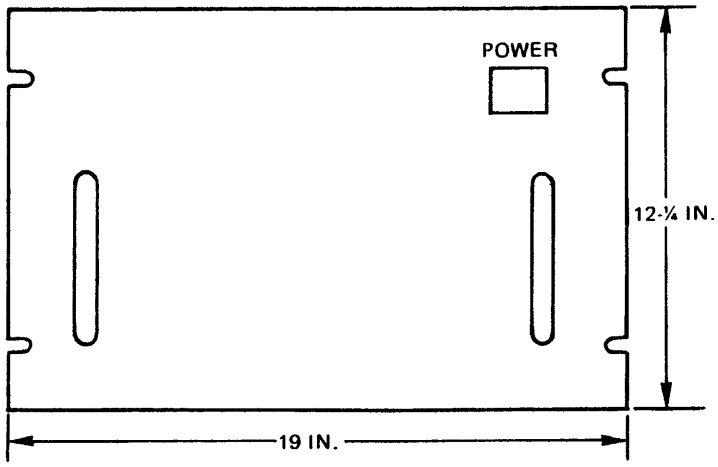

Figure 4-31 illustrates the cabling required to connect the Head Per Track Storage Drive to the SPC-16 system.

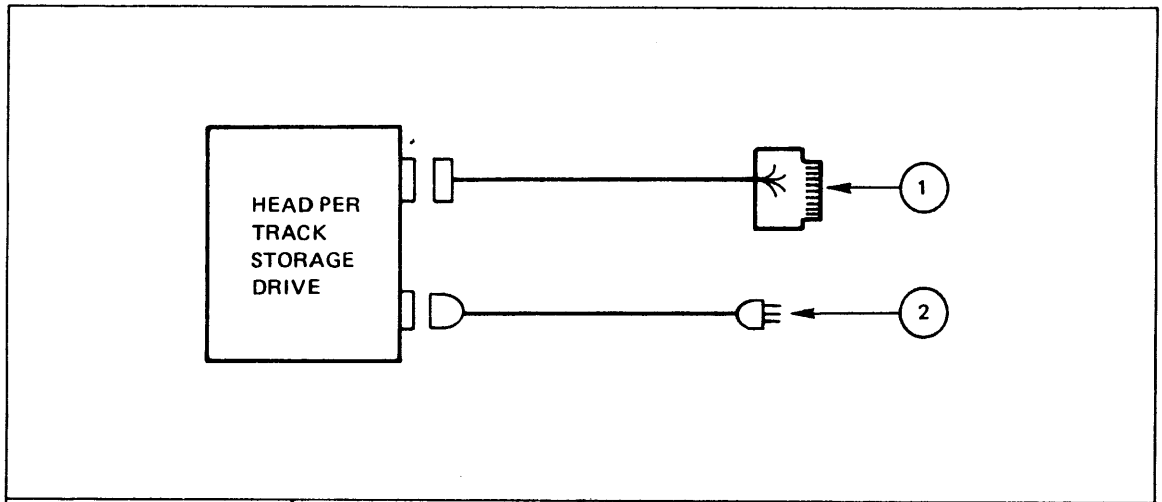

	PART NUMBER	STD. LENGTH	MAX. LENGTH	FUNCTION
1	21D00486A01	8 ft	25 ft	SIGNAL
2	SUPPLIED WITH HPTSD	8 ft	——	AC POWER

Figure 4-31. Cable Diagram, 3342 Head Per Track Storage Drive

Applicable vendor manual:

General Instruments Installation and Operation Manual, Model 500 FR Disk Memory System.

4.3.11 3346/3347 Disk Storage Drive

General Automation offers two disk storage systems featuring high-performance, random access disk drives that can be mounted in a 1901 or 1910 System Enclosure.

- o Model 3346 - 1000 accommodates up to 2.5 million 16-bit words on one fixed disk and a one-disk removable disk pack.

- o Model 3347 - 1000 accommodates up to 1.25 million 16-bit words in a one-disk removable disk pack.

Data transfer rate for either system is 1.5885 MHz.

Each of the above models is supplied with a two-card controller. One controller can support four disk storage drives, so that when a disk storage drive and controller are purchased, up to three additional disk storage drives can be purchased to operate through the controller. Additional disk storage drives may be ordered as follows:

- o Model 3346 - 1110; Additional Disk Storage Drive (for use with 3346 - 1000).

- o Model 3347 - 1110; Additional Disk Storage Drive (for use with 3347 - 1000)

The drawing below shows the frontal dimensions of the 3346 and 3347 Disk Storage Drives. These units are designed to be mounted in a standard 1901 or 1910 System Enclosure.

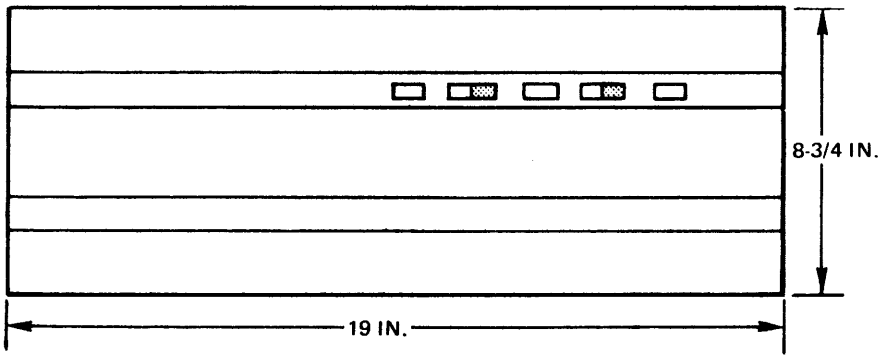

Figure 4-32 illustrates the cabling required to connect four Disk Storage Drives to the SPC-16 System.

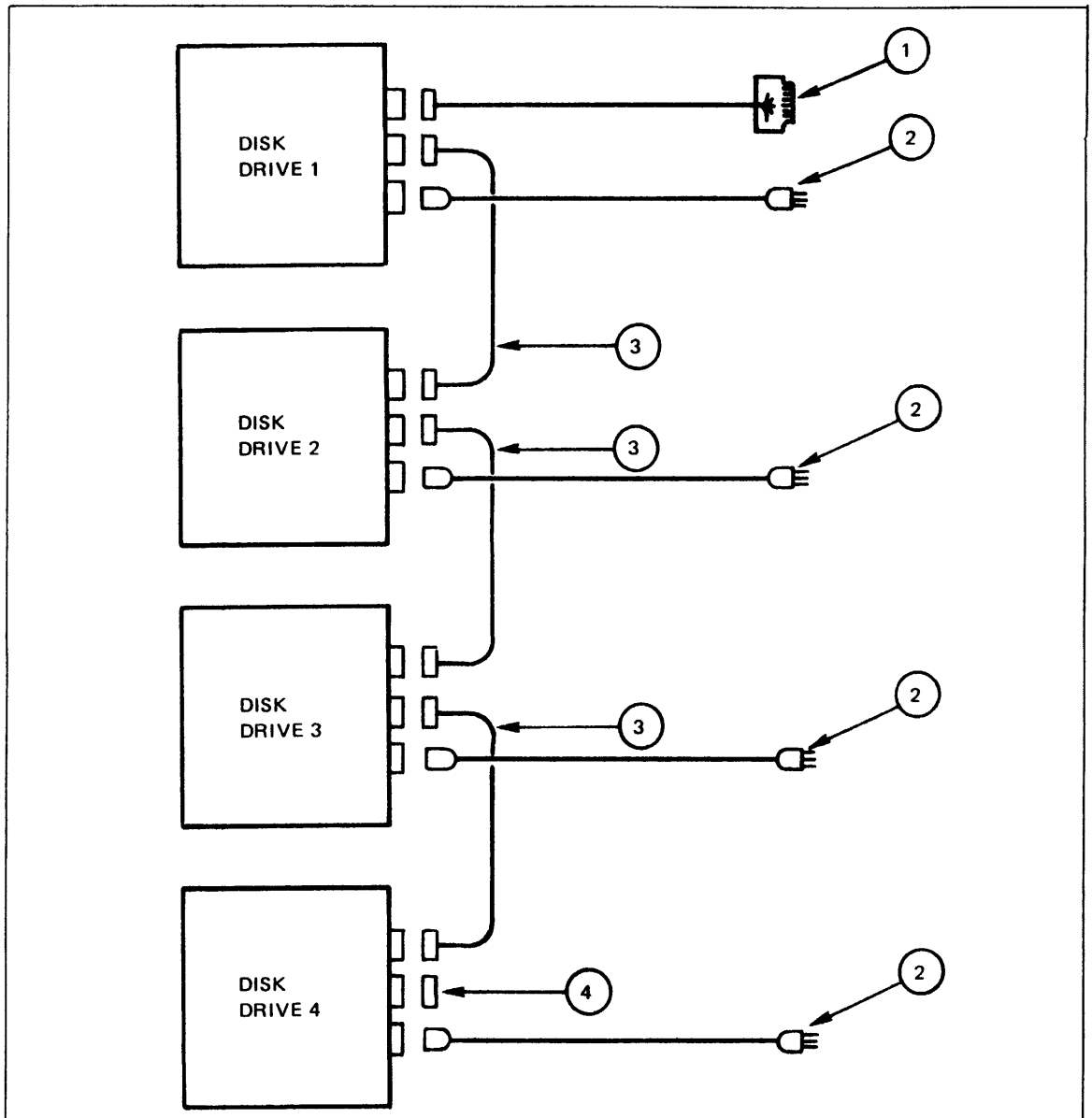

	PART NUMBER	STD. LENGTH	MAX. LENGTH	FUNCTION
1	21C00468A01	10 ft	Δ	SIGNAL
2	SUPPLIED WITH DR	8 ft	—	AC POWER
3	301380-009 (CAELUS MEMORY)	4 ft	Δ	SIGNAL
4	301308-9 (CAELUS MEMORY)	—	—	TERMINATION PLUG

Δ COMBINED TOTAL MAXIMUM LENGTH: 50 ft

Figure 4-32. Cable Diagram, 3346/3347 Disk Storage Drive

Applicable vendor manuals:

Caelus Operation and Interface Manual, Volume I, Model 303/1 (for 3346)
Caelus Operation and Interface Manual, Volume II, Model 303/2 (for 3347)

4.3.12 3349 "Floppy" Disk Storage System

General Automation offers a "floppy" disk storage system, Model 3349, that is comprised of two disk drives and a DC power supply.

Each disk accommodates up to 147,968 16-bit words. Data is transferred at a rate of 15,625 words per second.

The Disk Storage System controller utilizes two card slots. One controller can support four disk storage drives, so that when a 3349 Disk Storage System and controller are purchased, an additional 3349 Disk Storage System can be purchased to operate through the controller.

The drawing below shows the major dimensions of the 3349 Disk Storage System:

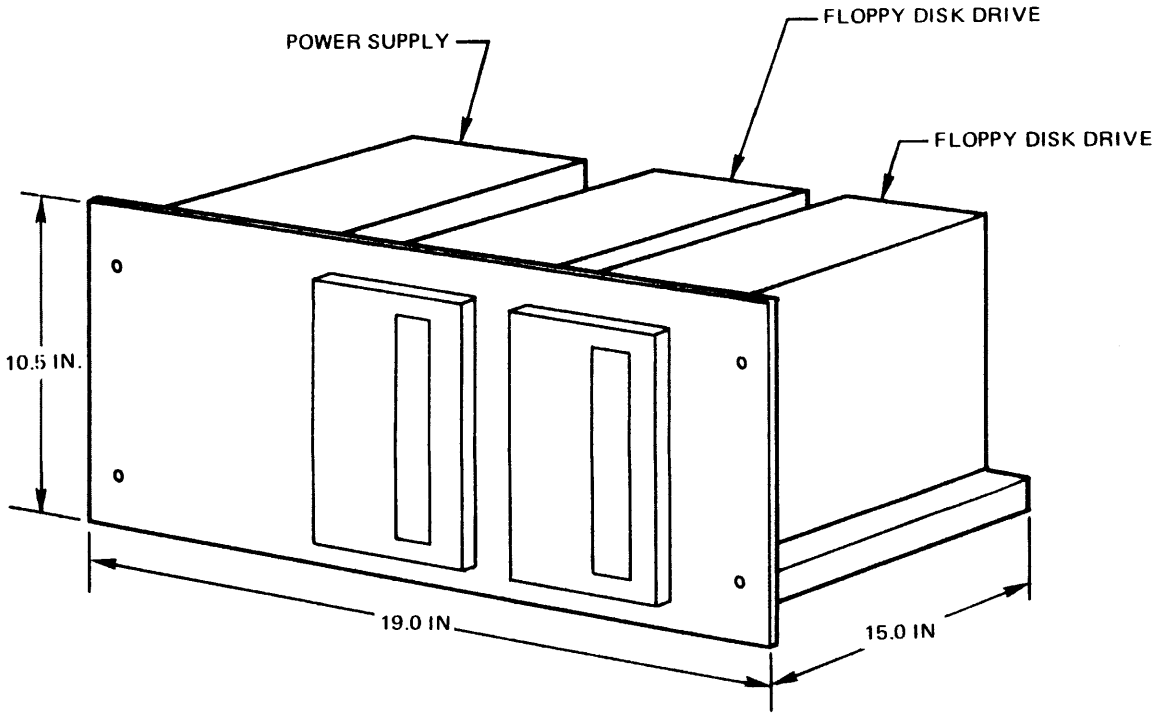

Figure 4-33 illustrates the cabling required to connect four floppy disk drives to the SPC-16 System.

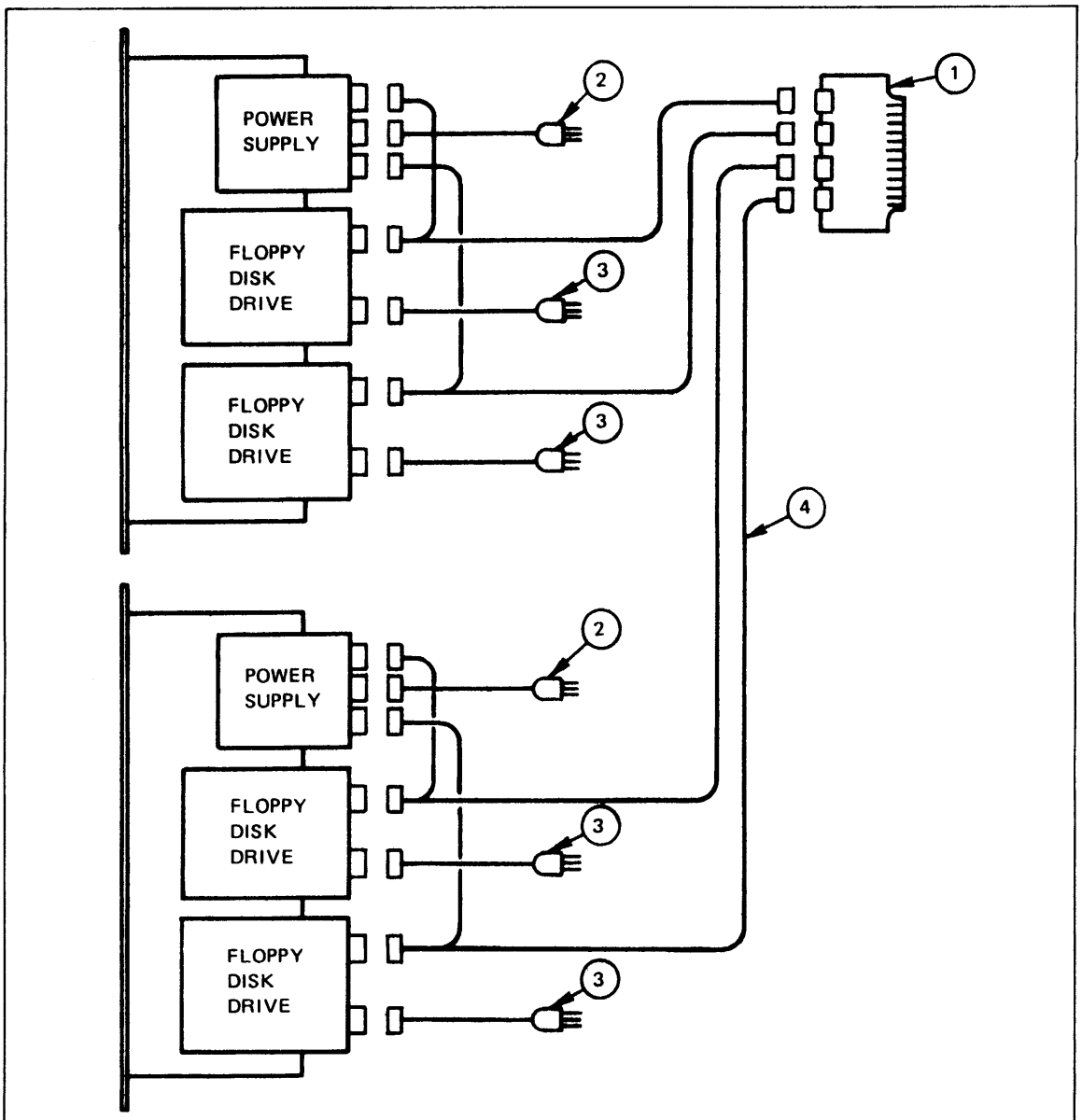

	PART NUMBER	STD. LENGTH	MAX. LENGTH	FUNCTION
1	21D00522A01	—	—	CABLE ADAPTER
2	21C00525A01	6 ft	—	AC POWER
3	21C00524A01	6 ft	—	AC POWER
4	21D00523A01	6 ft	25 ft	SIGNAL

Figure 4-33. Cable Diagram, 3349 Floppy Disk Storage System

Applicable vendor manual:

Memorex 651 Flexible Disk File OEM Maintenance Manual

4.3.13 3353 Line Printer

General Automation offers line printing systems featuring a rotating drum line printer that prints up to 600 lines per minute. The rotating print drum contains a character set of 64 characters. Lines are 132 columns in length.

Vertical spacing produces six lines per inch on the standard 3353 Line Printer (Model 3353 - 1010); an optional model (Model 3353 - 1011) permits selection of either six or eight lines per inch.

The Line Printer controller supplied with each of the above models utilizes one card slot, but is logically located on one-half card. The Line Printer may be combined with a Card Reader (Section 4.3.2) to operate through a common one-card controller, as described in Section 4.3.14.

The drawing below shows the major dimensions of the 3353 Line Printer.

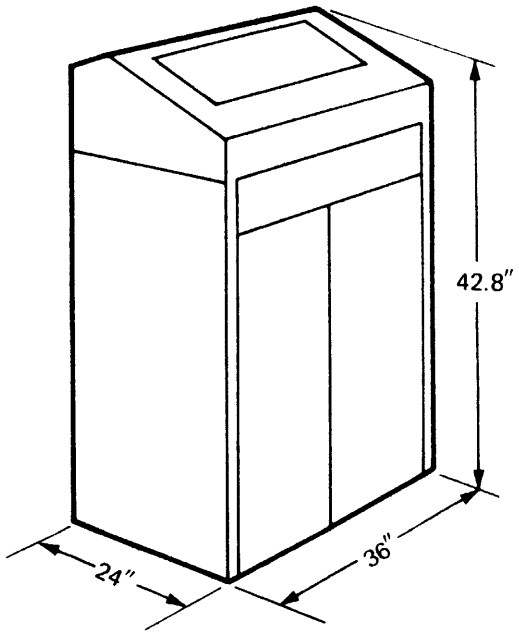

Figure 4-34 illustrates the cabling required to connect the Line Printer to the SPC-16 system.

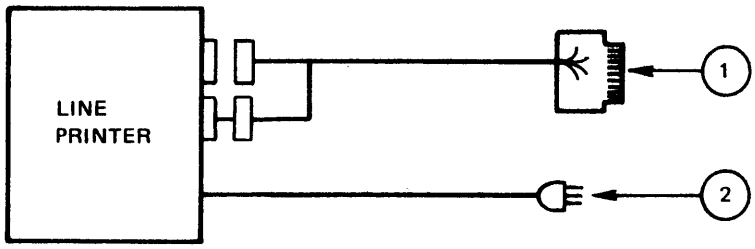

	PART NUMBER	STD. LENGTH	MAX. LENGTH	FUNCTION
1	21D00386A21	15 ft	25 ft	SIGNAL
2	ATTACHED TO LP	7 ft	—	AC POWER

Figure 4-34. Cable Diagram, 3353 Line Printer

Applicable vendor manual:

Data Printer Model V-132-C Line Printer, Volume I.

4.3.14 3355/3356/3357/3358 Line Printer and Card Reader

For users requiring both a 3353 Line Printer (Section 4.3.13) and a 3315/3316/3317/3318 Card Reader (Section 4.3.2), General Automation offers four line printer/card reader options. Although the line printer and card reader of each option are discrete units, they share a common one-card controller. The options are as follows:

- Model 3355 - 1000 is comprised of a 600-line-per-minute printer and a 1000-card-per-minute reader.
- Model 3356 - 1000 is comprised of a 600-line-per-minute printer and a 600-card-per-minute reader.
- Model 3357 - 1000 is comprised of a 600-line-per-minute printer and a 400-card-per-minute reader.
- Model 3358 - 1000 is comprised of a 600-line-per-minute printer and a 300-card-per-minute reader.

An option that permits selection of 6 or 8 lines per inch on the line printer can be ordered by specifying Model 3355 - 1001, 3356 - 1001, 3357 - 1001 or 3358 - 1001 for the appropriate configuration above.

The dimensions of the Line Printer are as shown in Section 4.3.13; the dimensions of the Card Reader are shown in Section 4.3.2.

Figure 4-35 illustrates the cabling required to connect the Line Printer and Card Reader to the SPC-16 System.

4.3.15 3362/3363 System Console TTY

General Automation offers two console TTY systems:

- Model 3362 - which is a Teletype ASR-33.
- Model 3363 - which is a Teletype ASR-35.

The 3362 and 3363 are automatic send-receive units that process eight-level, 11-unit, ASCII codes at a speed of 10 characters per second. Each unit is a page printer and is equipped with a keyboard similar to a typewriter keyboard. A paper tape punch and a paper tape reader included in both units provide a paper tape handling capability, permitting automatic punched tape operation.

The 3362 and 3363 can be ordered as 3362 - 1000 and 3363 - 1000, respectively, for 60 Hz use and as 3362 - 2000 and 3363 - 2000, respectively, for 50 Hz use.

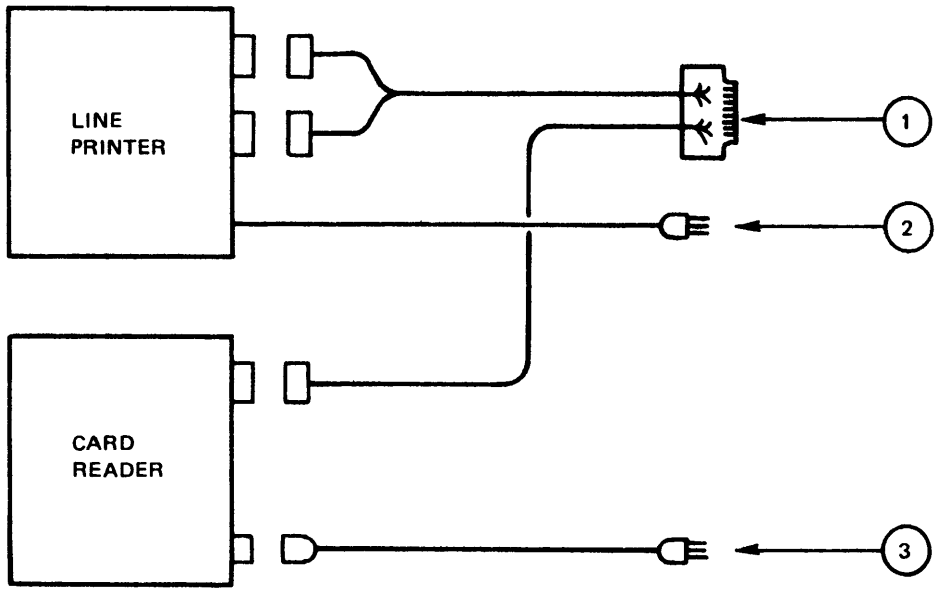

	PART NO.	STD. LENGTH	MAX. LENGTH	FUNCTION
1	21D00386A11	15 ft	25 ft	SIGNAL
2	ATTACHED TO LP	7 ft	——	AC POWER
3	SUPPLIED WITH CR	8 ft	——	AC POWER

Figure 4-35. Cable Diagram, 3355/3356/3357/3358
Line Printer and Card Reader

The drawings below show the major dimensions of each model TTY:

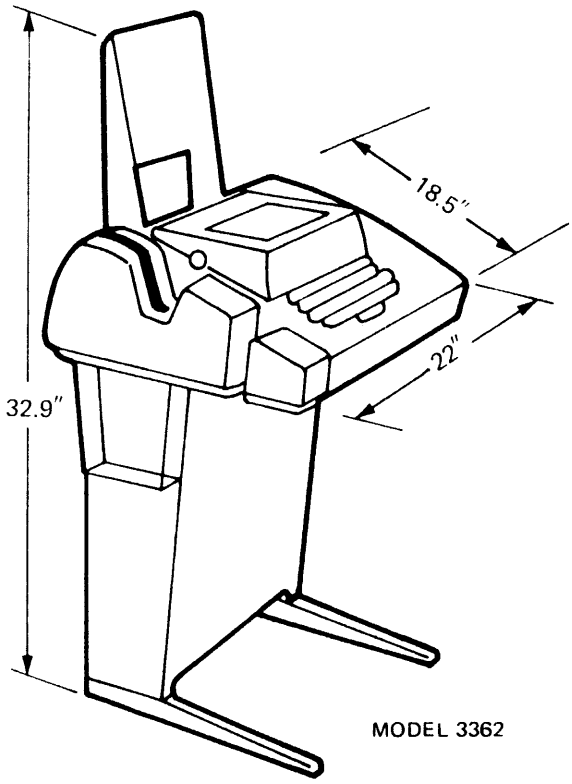

MODEL 3362

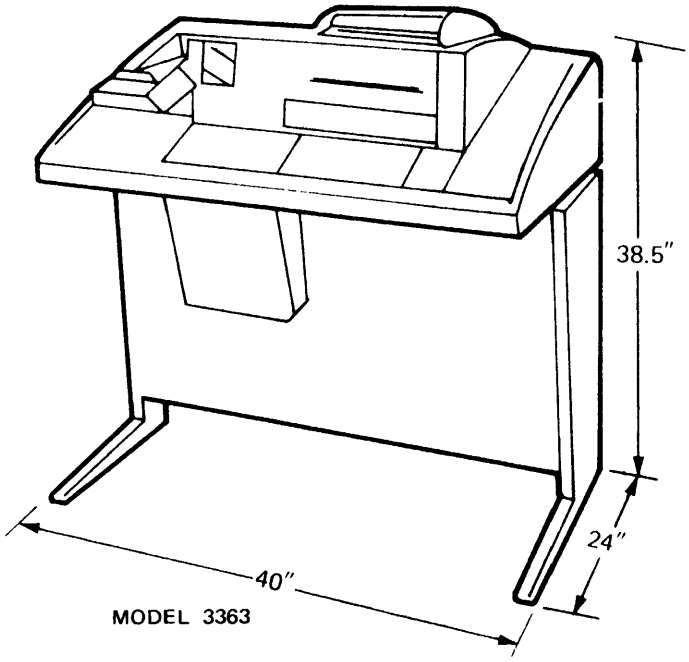

MODEL 3363

Figure 4-36 illustrates the cabling required to connect the console teletype to the SPC-16 System.

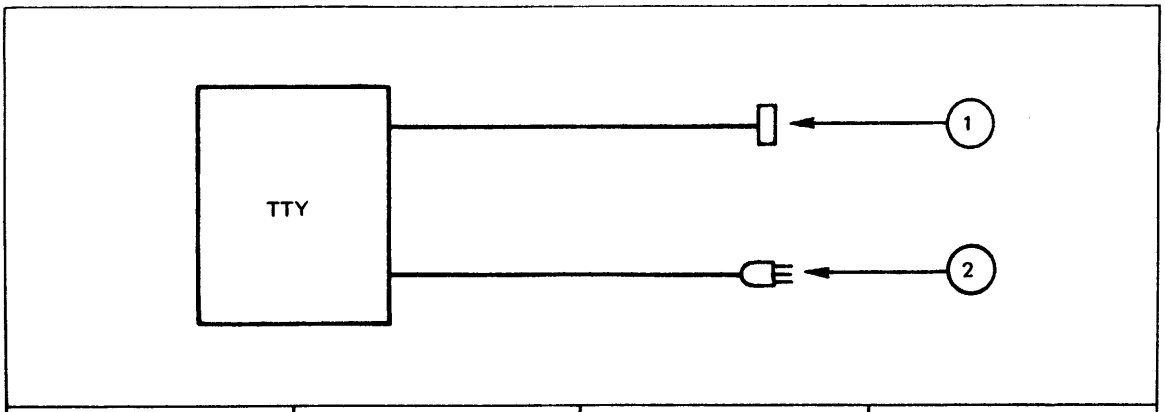

	PART NUMBER	STD. LENGTH	MAX. LENGTH	FUNCTION
1	ATTACHED TO TTY	20 ft	1,000 ft	SIGNAL
2	ATTACHED TO TTY	10 ft	—	AC POWER

Figure 4-36. Cable Diagram, 3362/3363 TTY

Applicable vendor manuals for 3362:

ITT Bulletin 310B, Volumes I and II
ITT Bulletin 1184B

Applicable vendor manuals for 3363:

ITT Bulletin 290B, Volumes I and II
ITT Bulletin 295B
ITT Bulletin 1187B
ITT Bulletin 1188B

SECTION 5
SYSTEM VERIFICATION PROCEDURES

With all units connected, a series of tests must be made to verify the integrity of the system. The test procedure consists of verification of the DC power supply outputs followed by the running of several General Automation "Test and Verify" programs. The Test and Verify programs are routines designed to exercise all of the major circuits of a given system element and to "tell" the operator if a malfunction has been detected.

The following equipment is recommended for use during the test procedure:

a. Tektronix Model 453 dual trace oscilloscope, or equivalent.

b. Triplett VOM Model 630-A multimeter.

c. Standard Field Service tool kit.

The General Automation Field Service representative will perform a thorough checkout of the entire system before leaving the installation site.

Malfunctions occurring at any future time should be immediately reported to the nearest General Automation service center.

If it becomes necessary to ship a piece of equipment to General Automation, the greatest care should be given to repacking. The original packing materials should be used if practicable.

5.1 VERIFICATION OF POWER SUPPLY OUTPUT LEVELS

Since proper operation of the SPC-16 system depends upon the DC power arriving from the Processor Power Supply and I/O Power Supply, integrity of the power supply outputs should constitute one of the first steps in verifying the integrity of the system.

PROCESSOR POWER SUPPLY VERIFICATION

The output voltage levels of the Processor Power Supply can be easily verified by measuring the voltages at the DC Power Input Connector (J17) on the rear of the SPC-16 chassis. Pin assignments for the J17 connector are as shown in Figure 5-1.

Pin	Signal
1	+20V
2	COMM
3	COMM R
4	+20V
5	COMM
6	COMM
7	COMM
8	COMM
9	RS>>+
10	+15V
11	+5V
12	PFD>-
13	-15V
14	+5VR
15	+5V

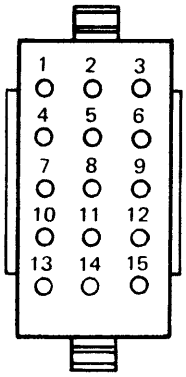

Figure 5-1. Pin Assignments, DC Power Input Connector (J17)

Each of the four voltage output levels (+5V, +15V, -15V and +20V) must be within ±2% of the specified level. The pins to be checked are summarized in Table 5-1.

Further, the power supply outputs must have a peak-to-peak AC ripple of less than 0.5%. These limits, also shown in Table 5-1, should be verified with an oscilloscope.

Table 5-1. Power Verification Points

Pin Number		Nominal Voltage (±2%)	Allowable AC Ripple, Peak-To-Peak
J17	2	Ground	-
J17	11	+5V (+4.9V to +5.1V)	25mV
J17	10	+15V (+14.7V to +15.3V)	75mV
J17	13	-15V (-14.7V to -15.3V)	75mV
J17	1	+20V (+19.6V to +20.4V)	100mV

NOTE

These pin numbers apply to both the SPC-16/40/60/80 and 45/65/85 series.

If the above AC ripple limits are exceeded, the power supply should be replaced.

If the output level adjustment is required, a separate voltage adjustment potentiometer is provided in the power supply for each output (+5V, +15V, -15V and +20V).

To gain access to the potentiometers:

1. Remove the power supply assembly from the rack or cabinet in which it is mounted.

2. Remove the bottom cover of the power supply. The potentiometers are now accessible through the bottom of the power supply assembly.

3. Measure the output at J17 with a VOM or digital voltmeter and, if any output registers outside ±2% nominal value specified for that output, adjust the appropriate potentiometer to bring the value within the range. Figure 5-2 illustrates the four potentiometers provided for this adjustment.

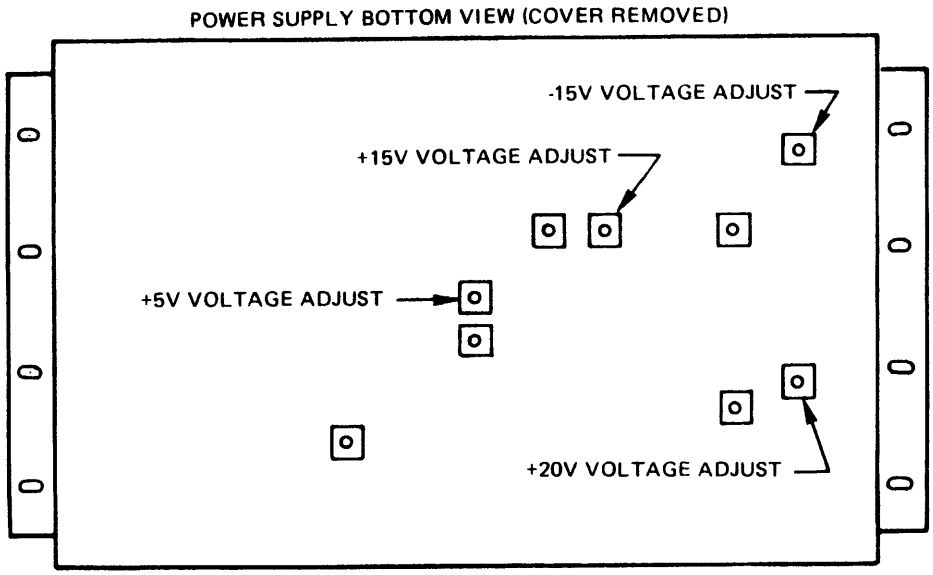

Figure 5-2. Power Supply Adjustment Potentiometers

I/O POWER SUPPLY VERIFICATION

If an I/O Enclosure is included in the system, verification of its power supply output levels and AC ripple is also suggested. The procedure is as described for the Processor Power Supply, except that there is no 20-volt output from the I/O Power Supply. The first four pin assignments given in Table 5-1 are also valid at the I/O Enclosure DC Power Input Connector.

5.2 SYSTEM TEST AND VERIFY PROGRAMS

With each system ordered, General Automation supplies a packet of documents that contains instructions on using the Test and Verify programs. A Test and Verify program is a routine that exercises the circuits of a given GA processor, memory, or peripheral unit, causing the unit to perform all of the operations it would perform in the course of normal use. If an operational error is encountered, the Test and Verify program causes a code to be output to the operator; the code is interpreted by referring to the error directory in the particular program's operation instructions.

The ASDS Packing List is a list of Test and Verify materials (documents, paper-tape, etc.) pertaining to the system ordered; and it should be delivered with the system.

APPENDIX A
INFORMATION FOR ORIGINAL EQUIPMENT MANUFACTURERS

Information in the main body of this manual is based on systems comprised only of elements that can be obtained from General Automation. Users wishing to incorporate other manufacturers' equipment into their SPC-16 system should use the specifications in this appendix to ensure compatibility with GA supplied elements.

CONTROLLER CARD/PADDLE BOARD PIN RELATIONSHIPS

As described in Section 3.2.1, General Automation implements the controller-to-peripheral unit interface using a paddle board approach. Figure A-1 illustrates the relationship between pins on the 140-pin edge connector that accepts the controller board and pins on the 56-pin edge connector that accepts the paddle board via which the cable to the associated peripheral unit is connected. This diagram applies equally to the Integral I/O package (SPC-16 Models 40, 60 and 80) and the External I/O Enclosure.

Users wishing to include their own controller boards in the system can order a "blank" 7.75 x 11.00 board, the GA Universal Interface Board, as Model 1924-6001.

Table A-1 summarizes signal pin assignments. Pins 67 through 80 are active only if the enclosure contains a Data Channel Module card. Pins 81 through 136 provide communication between a peripheral and its controller.

A non-GA peripheral unit can be interfaced to the system by using a standard 56-pin paddle board, the Universal Cable Termination Board, which is ordered as Model 1915-0000.

DC CURRENT REQUIREMENTS

The SPC-16 Processor and Model 1615 I/O Enclosure have separate DC power supplies.

The remainder of this section lists the DC current requirements of each CPU board, memory board and controller board in an SPC-16 system. A user wishing to install his own controller board can use this information to estimate available current.

The outputs of the Processor DC Power Supply are:

+20 VDC @6A average	Full Load
+15 VDC @5A maximum	Full Load
-15 VDC @5A maximum	Full Load
+5 VDC @25A maximum	Full Load

Table A-2 lists the current required by the Central Processing Unit and memory boards.

If the system under consideration is based on an SPC-16/40, 60 or 80, the computer chassis may accommodate up to eight controller boards. These boards consume an additional amount of current from the Processor DC Power Supply, as shown in Table A-3.

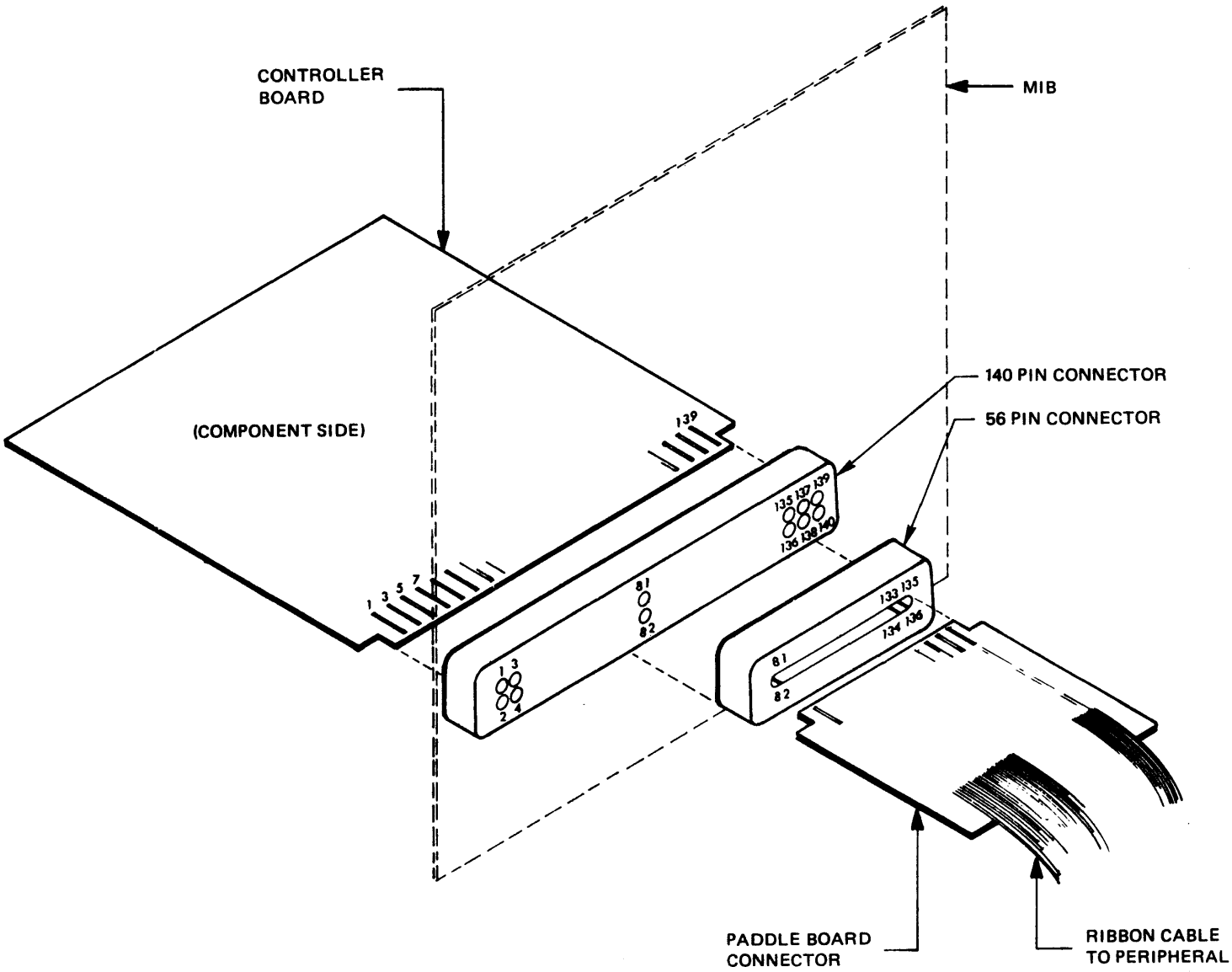

Figure A-1. Pin Relationship Between Controller Card and Paddle Board

Table A-1. I/O Signal Pin Assignments

Pin	Signal	Pin	Signal	Pin	Signal	Pin	Signal
1	+5	36	OTB15-	71	DHLD-	106	*
2	-15	37	FAP-	72	DAD0-	107	*
3	GND	38	DTP-	73	DAD1-	108	*
4	GND	39	DDTP-	74	DAD2-	109	*
5	INB00-	40	POLL-	75	DINT-	110	*
6	INB01-	41	D3-	76	DCAK-	111	*
7	INB02-	42	SYNC-	77	DCBC-	112	*
8	INB03-	43	SFEC-	78	DCIN-	113	*
9	INB04-	44	VU+	79	DCTP-	114	*
10	INB05-	45	CACK-	80	DCEN-	115	*
11	INB06-	46	SYRT-	81	*	116	*
12	INB07-	47	IHLD-	82	*	117	*
13	INB08-	48	CNTL-	83	*	118	*
14	INB09-	49	WRIT-	84	*	119	*
15	INB10-	50	DACK-	85	*	120	*
16	INB11-	51	READ-	86	*	121	*
17	INB12-	52	DREQ-	87	*	122	*
18	INB13-	53	TEST-	88	*	123	*
19	INB14-	54	IREQ-	89	*	124	*
20	INB15-	55	IACK-	90	*	125	*
21	OTB00-	56	DMF0-	91	*	126	*
22	OTB01-	57	DMF1-	92	*	127	*
23	OTB02-	58	RQIN-	93	*	128	*
24	OTB03-	59	IPRS-	94	*	129	*
25	OTB04-	60	RDCL-	95	*	130	*
26	OTB05-	61	DCHN-	96	*	131	*
27	OTB06-	62	CLDS-	97	*	132	*
28	OTB07-	63	IPSO-	98	*	133	*
29	OTB08-	64	IPSI-	99	*	134	*
30	OTB09-	65	DPSO-	100	*	135	*
31	OTB10-	66	DPSI-	101	*	136	*
32	OTB11-	67	DCSO-	102	*	137	GND
33	OTB12-	68	DCSI-	103	*	138	GND
34	OTB13-	69	Unused	104	*	139	+15
35	OTB14-	70	DCRQ-	105	*	140	+5

* Controller card/Peripheral cable interface

Table A-2. DC Current Requirements of CPU and Memory Boards

Board Type		+5V	+15V	-15V	+20V
MIO	CPU Boards	10.00A	0.60A	-	-
Arithmetic	CPU Boards				
Macro	CPU Boards				
Timing	CPU Boards				
Console	CPU Boards				
MIB	CPU Boards				
Expanded MIB	CPU Boards				
MLD Board (SPC-16/45/65/85 only)		0.25A	0.12A	-	-
4K Memory Board	Operating	0.92A	1.70A	1.25A	6.00A
8K Memory Board	Operating	0.90A	1.40A	1.40A	6.00A
4K Memory Board	Idle	0.68A	0.15A	0.30A	-
8K Memory Board	Idle	0.80A	0.20A	0.40A	-

Table A-3. DC Current Requirements of General Automation Controller Boards

Model Number	No. of Bds	+5 VDC	+15 VDC	-15 VDC
1615 - 0016 HSMD	2	2.55A	-	-
1615 - 0203 CIT	1	1.18A	-	-
1615 - 0202 CID	1	.72A	-	-
1615 - 0209 MHSDC	1	1.43A	-	-
1615 - 0210 CCIF	2	2.17A	-	1.0A
1615 - 0215 GAARD	1Δ	1.00A	.25A	.25A
1615 - 0216 GAARD	1Δ	1.00A	.25A	.25A
1615 - 0220 HSAPU	5	N.A.	-	-
1615 - 0221 HSAPU	5	N.A.	-	-
3315 - 6200 CR	1	.88A		-
3316 CR	1	.88A	-	-
3317 CR	1	.88A	-	-
3318 CR	1	.88A	-	-
3314 CR	1	1.20A	-	-
3321 PTR	1	.50A	-	-
3322 PTP	1	.50A	-	-
3323 PTR & PTP	1	1.00A	-	-
3325 PTR/PTP	1	1.00A	-	-
3331 MTU	3	3.90A	-	-
3332 MTU	3	3.90A	-	-
3333 MTU	3	3.90A	-	-
3334 MTU	3	4.10A	-	-
3335 MTU	3	4.10A	-	-
3336 MTU	3	4.10A	-	-
3341 DISK	3	5.06A	-	-
3342 HPTSD	2	2.48A	-	-
3343 DISK	3	5.06A	-	-
3346 DISK	2	3.00A	-	-
3347 DISK	2	3.00A	-	-
3349 DISK	2	2.50A	-	-
3353 LP	1	.85A	-	-
3354 LP	1	.85A	-	-
3355 LP & CR	1	1.75A	-	-
3356 LP & CR	1	1.75A	-	-
3357 LP & CR	1	1.75A	-	-
3358 - 6200 LP & CR	1	1.75A	-	-

Δ Occupies four (4) card slots.
N.A. Not Available

In considering controller boards in the I/O Enclosure, Table A-3 would reflect current required from the I/O Enclosure DC Power Supply. The outputs of this supply are:

+15 VDC @5A max.	Full Load
-15 VDC @5A max.	Full Load
+5 VDC @25A max.	Full Load

GENERAL AUTOMATION USER CORRECTION REQUEST

Document Number: _____ Today's Date: _____

Document Title: _____

Page Number: _____

Describe change or correction requested:

Name and Address of Requester: _____

_____

_____

(Leave blank below this line)

Request Examined by: _____ Date: _____

Accepted ( ) Rejected ( )

If Rejected, Reason: _____

_____

_____

YOUR COMMENTS, PLEASE . . .

This publication serves as a reference for systems analysts, programmers and operators of General Automation systems. Your answers to the questions on the back of this form help us produce better publications for your use.

Fold

Fold

FIRST CLASS
PERMIT NO. 423
ANAHEIM, CALIF.

BUSINESS REPLY MAIL
No Postage Necessary if Mailed in the United States

Postage Will Be Paid By . . .

General Automation, Inc.
1055 East St.
Anaheim, Calif. 92805

Attention: Technical Publications

Cut Along Line

Fold

Fold

General Automation, Inc.
1055 East St.
Anaheim, Calif. 92805

Additional Comments:

GENERAL AUTOMATION, INC.

1055 South East Street, Anaheim, California 92805 (714) 778-4800